City of Fitchburg
Planning/Zoning Department
5520 Lacy Road
Fitchburg, Wi 53711 (608-270-4200)

SMARTCODE
BUILDING/SITE PLAN APPLICATION (ARTICLE 5)

1. **Location of Property:**
Street Address: Lot 54, East Cheryl Parkway
Legal Description - (Metes & Bounds, or Lot No. And Plat): Lot 54 Third Addition to Nine Springs

2. **Description of Project:** 78 Unit Apartment Building with underground pkg

3. **Existing Transect Zone:** T5 & T4 **Article 3 or Article 4 approval date:** _____

4. **Size of Site:** Site = 64,815sf, T5=52,336sf T4=12,479sf **Site Density (if applicable):** 831 sf/D.U., 671 sf/D.U. for T5

5. **Building/Site Plan applications shall provide plans and information showing the following:**

- ☐ 1. Building Disposition
- ☐ 2. Building Configuration
- ☐ 3. Building Use
- ☐ 4. Parking calculation & location
- ☐ 5. Number of dwelling units
- ☐ 6. Base Residential Density
- ☐ 7. Building square footage
- ☐ 8. All requests for Administrative Waivers, if any
- ☐ 9. All requests for Administrative Approvals, if any
- ☐ 10. All known requests for Conditional Use Permits, if any
- ☐ 11. Civic Building design(s)
- ☐ 12. Landscape Standards
- ☐ 13. Signage Standards
- ☐ 14. Special Requirements, if any
- ☐ 15. Architectural Standards
- ☐ 16. Fencing Standards
- ☐ 17. Lighting Standards
- ☐ 18. Statistics, maps and other documentation showing how the Article 5 application, in combination with the past approved Article 5 plans, will meet the approved Community Regulating Plan, and the standards of this Chapter.

*****Also submit all mapping in either CADD or GIS files**

Current Owner(s) of Property: Avante Properties

Address: 120 E. Lakeside, Madison WI **Phone No.:** 608.294.4085

Contact Person: Karyl Lynn Bruckner **E-mail:** karyllynn@avanteproperties.com

Address: _____ **Phone No.:** _____

Respectfully Submitted By: [signature] **Date:** 8.29.13
Owner's or Authorized Agent's Signature
*(If multiple owners, application shall include statement of consent by all property owners)

PLEASE NOTE – Applicants shall be responsible for legal or outside consultant costs incurred by the City. It is the responsibility of the owner/applicant to insure compliance with all local and state requirements.

*Application shall be accompanied by one (1) PDF document of complete submittal, one (1) full-size set of plans, two (2) reduced sets of plans (11" x 17"), and the required CADD or GIS files for mapping.

FOR CITY USE ONLY

Date Received: 8/30/2013 **Permit Request No.:** _____ 9.9.13

Approval is based on plan set dated 8/28/2013, accompanying materials and responses to staff comments, along with approved Administrative Waiver to 5.13.4(g).

SITE PLAN REVIEW CHECKLIST:

YES	NO	
_____	_____	Signed and completed Building / Site Plan – Article 5 Application
_____	_____	Proposals / design compliant with Ch. 23 SmartCode District
_____	_____	Vicinity map (no larger than 11 x 17)
_____	_____	2 (two) reduced size (11 x 17) plan sets
_____	_____	1 (one) full set of bounded drawings, include landscape plans
_____	_____	1 (one) electronic copy (.tif or .pdf) of the plan set
_____	_____	CADD or GIS files for all mapping
		Plans to include existing and proposed information on the following:
_____	_____	Location of structures, improvements and landscaping
_____	_____	North arrow and scale bar
_____	_____	Site boundaries
_____	_____	Setback distance from property lines
_____	_____	Rights-of-way, property lines and easements
_____	_____	Location & dimensions of driveways, streets and sidewalks
_____	_____	On-site parking and circulation
_____	_____	Location of loading spaces, if applicable
_____	_____	Location of trash receptacle enclosure
_____	_____	Location of all outdoor electrical, plumbing and mechanical equipment
_____	_____	Landscaping Plan for site
_____	_____	Signage Plan for site (type & fixtures)
_____	_____	Elevations for each side of the building detailing the materials & colors
_____	_____	Fencing Plan (if installing fence)
_____	_____	Lighting Plan (in footcandles) & fixtures cut-sheets
_____	_____	Site plan data table containing: transect zone, site size in square feet or acres, lot coverage by building in square feet and percentage, residential density in units per acre (if applicable), square feet of impervious surface and parking and landscaping calculations.

ARTICLE 5 SUPPLEMENTAL FORM:

Building Disposition:

Lot(s) 54 Plat THIRD ADDITION TO NINE SPRINGS

Transect Zone: T5 & T4

Lot Width 102.5' Lot Coverage 65% for site, 62% for T4, 66% for T5

Type of Building: ☐ Edgeyard ☐ Sideyard ☐ Rearyard ☒ Courtyard ☐ Specialized

Principal Building Setbacks: Front (principal) 11' Front (secondary) 7.5' Side 21.5' Rear 14.5'

Primary Setback: 9.5' feet Frontage buildout (if applicable): 86 %

Outbuilding: ☐ Yes ☒ No

Outbuilding Setbacks: Front _____ Side _____ Rear _____

Building Configuration:

Type of Private Frontage: ☐ Common Yard ☐ Porch & Fence ☐ Light court ☐ Forecourt

☒ Stoop ☐ Shopfront ☐ Gallery ☐ Arcade

☐ Parking Lot ☐ Common Entry & Planter

% of clear glass of 1st story Façade: 26.2 %

Overall building height: 37'8" feet 3 stories

1st story: 10'8" feet

2nd story: 10'8" feet

[X] story: 11'6" feet

Building Use:

Use of principal building: Multi-Family Residential

# of residential dwelling units in principal building (if applicable): 78 dwelling units

Use of accessory building: n/a

*If multiple uses in building, please provide square footage of each type of use.

Parking & Density:

# of parking stalls provided within the Lot: 110

# of parking stalls along parking lane corresponding to the Lot Frontage: 0

# of parking stalls by lease or purchase from a Civic Parking Reserve within the Community Unit: 0

If looking to use Effective Parking standards, applicant shall provide completed Parking Occupancy Rate Table (Table 20)

Current density for transect zone within the block: T4=7.7 D.U./AC T5=53.8 D.U./AC (per 5.9.2f)

Parking Location:

Drive width: 18'-20'

Material of parking / drive areas: asphalt

Landscape:

% of landscape area of 1st Layer of Principal Frontage: 60 % (minimum 30%)

% of landscape area of 1st Layer of Secondary Frontage: 65 % (minimum 30%)

# of trees planted within the 1st Layer: 6 understory

Requirements: T3 – 1 tree shall be planted within the 1st Layer for every 800 sq. ft of landscape area

T4 – minimum of 1 Understory Tree or 6 shrubs planted within 1st Layer for every 500 sq. ft. of 1st Layer landscape area.

T5 – Trees not required in 1st Layer.

Signage:

A or B grid street: _____

Type of sign: _____
(* note: A sign permit is required for all signs)

Architectural: For buildings other than single-family and two-family Edgeyard & Sideyard Residential:

Type of building materials: composite siding, metal panel, brick veneer, powder coated aluminum railings
*Vinyl siding is not permitted.

Fence: ☒ Yes ☐ No

If yes, fence at the 1st Layer shall be painted or stained.

Balcony or porch: ☒ Yes ☐ No

Fencing:

Height of fence (if applicable): 3'-6" feet

Lighting:
Are all parking lot and exterior building lighting on private lots dark sky approved or full cut-off fixtures? ☒ Yes ☐ No

Average lighting levels, in footcandles, at the building frontage line: 0

Recycling Plan

Project Overview

Project Data

Client:	Knothe & Bruce Architects
Project:	Nine Springs
Location:	East Cheryl Parkway and No Oaks Ridge, Fitchburg, WI
Date:	August 12, 2013
Contact:	Kevin Burrow

Project Overview

This proposed development is located on the corner of East Cheryl Parkway and No Oaks Ridge on replatted Lot 54. The site is part of the approved Article 3 Nine Springs Neighborhood Plan. This application is for Article 5 Smartcode administrative approval for the development of (1) apartment building on (1) lot totaling 75 units and a (2) 2 story apartment buildings of 4 units and a 5 unit, with each unit sitting on its own lot.

The Plan

1. The wood frame building will recycle the following items produced onsite:

   Clean Wood

   Clean Dywall

   Shingles

   Courrugated Cardbaord

   Non-Toxic Metal

2. 70% of construction material must be recycled according to City of Fitchburg Chapter 41 Ordinance, Section 151-157

3. Construction and Demolition Reuse/Recycleing Report Form shall be submitted within 60 days of project completion.

MADRAX DIVISION

TRILARY, INC.
1080 UNIEK DRIVE
WAUNAKEE, WI 53597
P(800) 448-7931, P(608) 849-1080, F(608) 849-1081
WWW.MADRAX.COM, E-MAIL: SALES@MADRAX.COM

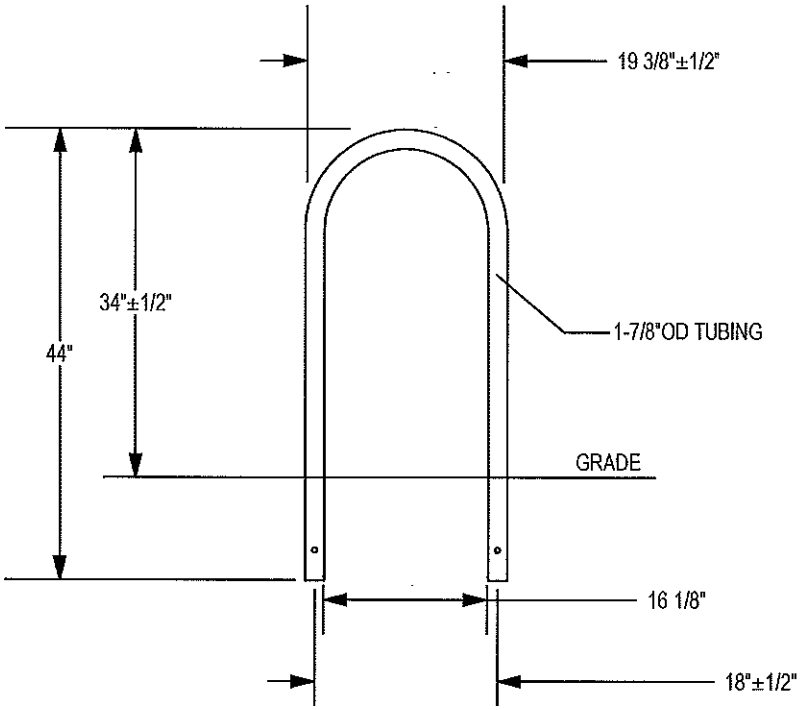

ELEVATION VIEW

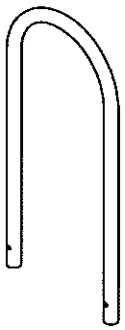

CHECK DESIRED MOUNT ☐

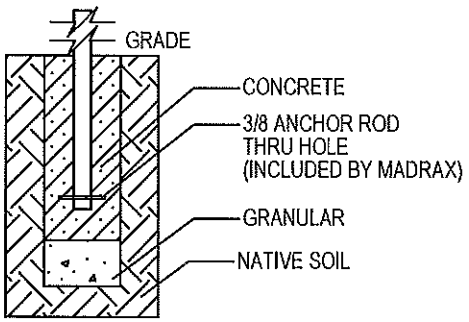

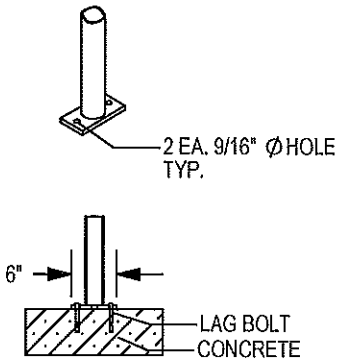

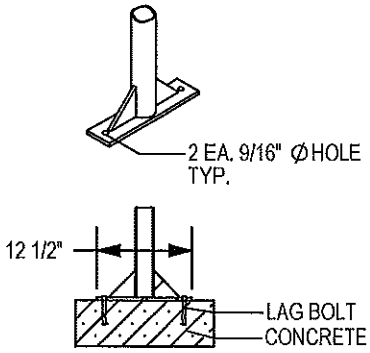

☐ IN GROUND MOUNT (IG)

☐ SURFACE FLANGE MOUNT (SF)

SECTION VIEWS

☐ SURFACE GUSSET MOUNT (SG)

UPCHARGE

PRODUCT: U190-IG(SF,SG)
DESCRIPTION: 'U' BIKE RACK
2 BIKE, SURFACE OR IN GROUND MOUNT
DATE: 8-5-02
ENG: TLG

CONFIDENTIAL DRAWING AND INFORMATION IS NOT TO BE COPIED OR DISCLOSED TO OTHERS WITHOUT THE CONSENT OF TRILARY, INC. SPECIFICATIONS ARE SUBJECT TO CHANGE WITHOUT NOTICE.

©2007 TRILARY, INC. ALL PROPRIETARY RIGHTS RESERVED.

NOTES:
1. INSTALL BIKE RACKS ACCORDING TO MANUFACTURER'S SPECIFICATIONS.
2. CONSULTANT TO SELECT COLOR(FINISH), SEE MANUFACTURER'S SPECIFICATIONS.
3. SEE SITE PLAN FOR LOCATION OR CONSULT OWNER.

WAC SERIES by RUUD LIGHTING DIRECT

WEDGE FORWARD THROW AREA LIGHT

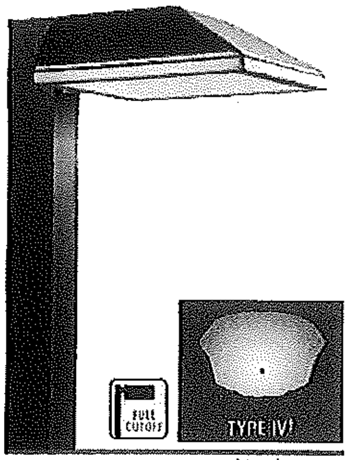

† Actual IES Type III

STANDARD IN BLACK
SHOWN WITH OPTIONAL ACCENT STRIPE

Minimum 150C Supply Conductors Required for Wall Mount.
NON COMBUSTIBLE SURFACE ONLY

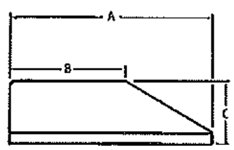

"A"	"B"	"C"
16" Square (406 mm)	9.5" (241 mm)	5.1" (129 mm)
22" Square (559 mm)	13.4" (340 mm)	6.5" (165 mm)

IP 65 Rating applies as a downlight only | c UL us LISTED for Wet Locations

Available in 16-inch or 22-inch square, the distinctive architectural styling of WPR Series fixtures offers an estimated 50% lower EPA values than typical shoebox housings. Fixtures feature a clear, tempered glass lens mounted securely in the recessed die-cast door frame. WAC Series fixtures use a forward throw area cutoff reflector with a main beam of 60+ degrees from vertical providing great lateral distribution and uniformity.

APPLICATIONS: Parking areas

LAMP INCLUDED

LAMP WATTAGE	HOUSING SIZE	CATALOG NUMBER
100W PSMH	16"	WAC*410-M
150W PSMH	16"	WAC*615-M
250W PSMH	22"	WAC*692S-M
320W PSMH Φ	22"	WAC*6932-M
400W PSMH Φ	22"	WAC*6940-M
100W HPS	16"	WAC*510-M
150W HPS	16"	WAC*515-M
250W HPS	22"	WAC*592-M
400W HPS	22"	WAC*594-M

Φ Reduced envelope lamp. ED28 for 320W & 400W PSMH.

MOUNTING CODES

Insert Code at * in Catalog Number

1 = 1-1/2" Close Pole Mount
2 = 6" Extended Pole Mount
8 = No Mounting Hardware (factory-drilled with 2-foot cord)
W = Wall Mount

NOTE When using multiple 22" sq. housings at a 90° configuration, a special 12" arm is required, see page 91.

SEE PAGE 88 FOR MORE INFORMATION ABOUT THESE MOUNTINGS

MOUNTING ALTERNATIVES START ON PAGE 90

FACTORY-INSTALLED OPTIONS

DESCRIPTION	CHANGE SUFFIX TO	ADD AFTER SUFFIX
277V Reactor Ballast (150W-400W PSMH only)	27	
480V Ballast		
(100W PSMH only)	5	
(150W-400W PSMH, 250W-400W HPS only)	5	
(100W-150W HPS only)	5	
Canada Tri-volt Ballast (120/277/347V)		
(150W-400W PSMH, 250W-400W HPS only)	T	
(100W & 150W HPS and 100W PSMH only)	T	
Single Fuse (277V Reactor, 120V, 277V, or 347V)	27, 1, 2 or 6	F
Dual Fuse (208V, 240V, or 480V) (n/a Canada)	3, 4 or 5	F
Quartz Standby (n/a 277V reactor) (delay-relay type) (includes 100W Q lamp)		Q
Button Photocell (n/a on 480V)		
(277V Reactor, 120V, 277V, 208V, or 240V)	27, 1, 2, 3, or 4	P
(Canada 347V)	6	P
External Photocell (480V only)	5	P
Accent Stripe (note at end of catalog number prefix: G=Grey, R=Red (WAC1615R-M)		

FIELD-INSTALLED ACCESSORIES

	DESCRIPTION	CATALOG NUMBER
	Wire Guard	
	16" Housing	FWG-16
	22" Housing	FWG-22
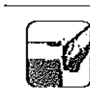	**Backlight Shield***	
	16" Housing	SBL-16
	22" Housing	SBL-22

* Standard on Wall Mount, mounting code "W"

SEE PAGE 87 FOR MORE INFORMATION ABOUT THESE ACCESSORIES

Spec sheets and photometric files are available at www.ruudlightingdirect.com

WPR SERIES by RUUD LIGHTING DIRECT

WEDGE WIDE THROW AREA LIGHT

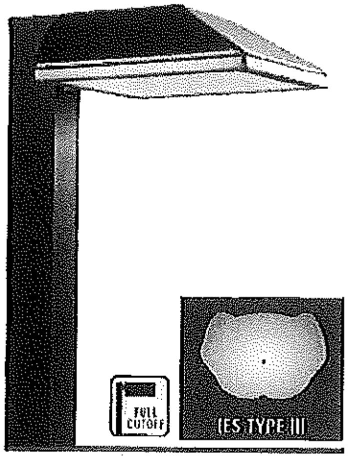

STANDARD IN BLACK
SHOWN WITH OPTIONAL ACCENT STRIPE

Minimum 150°C Supply Conductors Required for Wall Mount. NON COMBUSTIBLE SURFACE ONLY

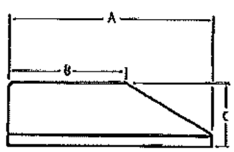

"A"	"B"	"C"
16" Square (406 mm)	9.5" (241 mm)	5.1" (129 mm)
22" Square (559 mm)	13.4" (340 mm)	6.5" (165 mm)

IP 65 Rating applies as a downlight only | c UL us LISTED for Wet Locations

Available in 16-inch or 22-inch square, the distinctive architectural styling of WPR Series fixtures offers an estimated 50% lower EPA values than typical shoebox housings. Fixtures feature a clear, tempered glass lens mounted securely in the recessed die-cast door frame. WPR Series fixtures use a parking/roadway reflector with Type III asymmetric distribution.

APPLICATIONS: Roadway, parking areas or for building-mounted security lighting

LAMP INCLUDED

LAMP WATTAGE	HOUSING SIZE	CATALOG NUMBER
100W PSMH	16"	WPR*410-M
150W PSMH	16"	WPR*615-M
250W PSMH	22"	WPR*6925-M
320W PSMH ‡	22"	WPR*6932-M
400W PSMH ‡	22"	WPR*6940-M
100W HPS	16"	WPR*510-M
150W HPS	16"	WPR*515-M
250W HPS	22"	WPR*592-M
400W HPS	22"	WPR*594-M

‡ Reduced envelope lamp. ED28 for 320W & 400W PSMH.

MOUNTING CODES

Insert Code at * in Catalog Number

1 = 1-1/2" Close Pole Mount

2 = 6" Extended Pole Mount

8 = No Mounting Hardware
(factory-drilled with 2-foot cord)

W = Wall Mount

NOTE: When using multiple 22" sq. housings at a 90° configuration, a special 12" arm is required, see page 91.

SEE PAGE 85 FOR MORE INFORMATION ABOUT THESE MOUNTINGS

MOUNTING ALTERNATIVES START ON PAGE 90

FACTORY-INSTALLED OPTIONS

DESCRIPTION	CHANGE SUFFIX TO	ADD AFTER SUFFIX
277V Reactor Ballast (150W-400W PSMH only)	27	
480V Ballast (100W PSMH only) (150W-400W PSMH, 250W-400W HPS only) (100W-150W HPS only)	 5 5 5	
Canada Tri-volt Ballast (120/277/347V) (150W-400W PSMH, 250W-400W HPS only) (100W & 150W HPS and 100W PSMH only)	 T T	
Single Fuse (277V Reactor, 120V, 277V, or 347V)	27, 1, 2 or 6	F
Dual Fuse (208V, 240V, or 480V) (n/a Canada)	3, 4 or 5	F
Quartz Standby (n/a 277V reactor) (delay-relay type) (includes 100W Q lamp)		 Q
Button Photocell (n/a on 480V) (277V Reactor, 120V, 277V, 208V, or 240V) (Canada 347V)	 27, 1, 2, 3, or 4 6	 P P
External Photocell (480V only)	5	P
Accent Stripe (note at end of catalog number prefix: G=Grey, R=Red (WPR161SR-M)		

FIELD-INSTALLED ACCESSORIES

	DESCRIPTION	CATALOG NUMBER
	Wire Guard 16" Housing 22" Housing	 FWG-16 FWG-22
	Backlight Shield 16" Housing 22" Housing	 SBL-16 SBL-22

SEE PAGE 88 FOR MORE INFORMATION ABOUT THESE ACCESSORIES

Spec sheets and photometric files are available at www.ruudlightingdirect.com

RC SERIES by RUUD LIGHTING DIRECT

RECESSED CANOPY LIGHT

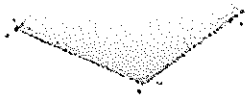

STANDARD IN WHITE FINISH

RC Series fixtures are 12- and 16-inches square and feature a seamless, aluminum die-cast housing. This highly efficient fixture features a precision specular reflector that provides cutoff distribution for maximum light levels. A crystal #73, flat tempered glass lens is standard.

APPLICATIONS: Canopy illumination, soffit lighting

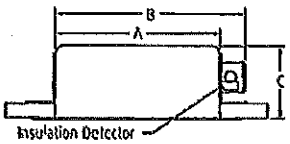

"A"	"B"	"C"
12" Square (305 mm)	13.88" (353 mm)	5.0" (127 mm)
16" Square (406 mm)	17.88" (454 mm)	6.5" (165 mm)

LAMP INCLUDED

LAMP WATTAGE	HOUSING SIZE	CATALOG NUMBER
70W PSMH	12"	MRC0407-1
100W PSMH	12"	MRC0410-1
150W PSMH	12"	MRC0615-1
150W PSMH	16"	RC0615-1
70W HPS	12"	MRC0507-1
100W HPS	12"	MRC0510-1
150W HPS	12"	MRC0515-1
150W HPS	16"	RC0515-1
26/32/42W CFL*	12"	MRC0242-U

* Specify lamp wattage for included lamp. Consult factory for discrete wattage labeling to meet state and/or local regulations where applicable.

OPTICAL PATTERN

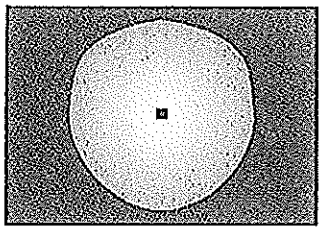

c UL us LISTED for Wet Locations

FACTORY-INSTALLED OPTIONS

DESCRIPTION	CHANGE SUFFIX TO	ADD AFTER SUFFIX	
277V Ballast (standard on CFL) (PSMH & 150W HPS in 16" housing) (70W-150W HPS in 12" housing)	 2 2		
208V Ballast (standard on CFL) (PSMH & 150W HPS in 16" housing) (70W-150W HPS in 12" housing)	 3 3		
240V Ballast (standard on CFL) (PSMH & 150W HPS in 16" housing) (70W-150W HPS in 12" housing)	 4 4		
Canada 347V Ballast (n/a CFL) (150W PSMH & 150W HPS in 16" housing) (70W & 100W PSMH) (70W-150W HPS in 12" housing)	 6 6 6		
Single Fuse (120V, 277V, or 347V)	1, 2 or 6	f	
Dual Fuse (208V or 240V) (n/a Canada)	3 or 4	f	
Quartz Standby (delay-relay type) (includes 100W Q lamp)		Q	
Glass Drop Prismatic Lens (12" housing only) (Lens is 1-3/4" (44 mm) deep)		A	

FIELD-INSTALLED ACCESSORIES

DESCRIPTION	CATALOG NUMBER
2 x 2 Lay-in Panel 12" Housing 16" Housing	 LPF-12 LPF-16

SEE PAGE 108 FOR MORE INFORMATION ABOUT THIS ACCESSORY

Spec sheets and photometric files are available at www.ruudlightingdirect.com

LUMINAIRE SPECIFICATION

The quality of life...

PROJECT : ____________________ DATE : ________

LOCATION : ____________________

QUANTITY : ________ NOTE : ____________________

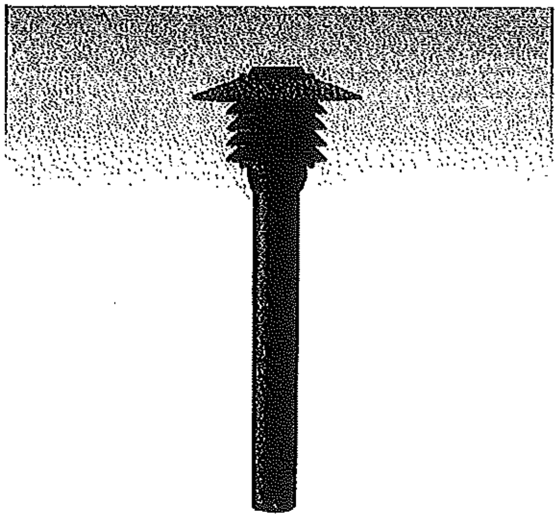

10052
Romeo bollard

IP65 ❄▲▲/EN 60598/CLASS I ⊕/▽/CE/IK08

Product Type
Bollard / Garden light / pillar light.

Product Information
A distinctly style bollard symmetrical light distribution. Main application designed for lighting of entrances, footpahts, squares and garden.

Material Characteristics
Extruded aluminium column. Die-cast aluminium housing with high corrosion resistance. Stainless steel screws. Durable silicone rubber gasket. Opal glass diffuser. Powder paint with high corrosion resistance with chemical chromatised protection.

Physical Data
Extruded aluminium height : 533 mm.
Weight: 9.5 Kg.

Colour

- ☐ Black - RAL 9011
- ☐ White - RAL 9003
- ☐ Matt Silver - RAL 9006
- ☐ Dark Grey - RAL 7043
- ☐ Metallic Silver - RAL 9006
- ☐ Custom - RAL ________

Reflector
None.

Lamp
TC-D 26w. G24d-3 1800 lm.

Note
- Integral control gear.

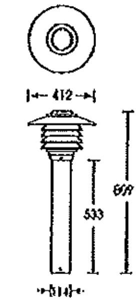

Mounting Detail

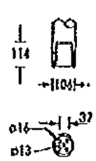

Anchor bolt kit for installation
A10191

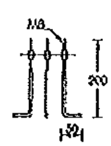

Branch : Business contact address / Showroom 2312 Ladprao Rd. Khongtan, Bangkapi, Bangkok 10240 Thailand
Email : info@ligmanlighting.com
Tel : +66 (0) 2 7333140 (9 lines)
Fax : +66 (0) 2 7333151 (Administration)
+66 (0) 2 7333151 (Overseas Sales)
+66 (0) 2 7333150 (Domestic Sales)
Head office : Chachoengsao factory office 37/2 Moo 4, Khonthong, Bangnampriew, Chachoengsao 24150 Thailand
Tel : +66 (0) 38 581676-81
Fax : +66 (0) 38 581415
Email : factory@ligmanlighting.com
Website : www.ligmanlighting.com

Product specification data sheet and all information is property of Ligman Lighting Co.,Ltd. All right reserved.
We reserved the right to change specification without prior notice

LUMINAIRE SPECIFICATION

The quality of life...

10052
Romeo bollard

ACCESSORIES

Branch : Business contact address / Showroom
29/2 Ladprao Rd., Wangthonglang, Bangkok 10240 Thailand
Email : info@ligmanlighting.com
Tel : +66 (0) 2 7339160 (9 lines)
Fax : +66 (0) 2 7339153 (Administration)
+66 (0) 2 7339154 (Overseas Sales)
+66 (0) 2 7339150 (Domestic Sales)

Head office : Chachoengsao factory office
17/2 Moo 4, Nongtheng, Bangnamprieow, Chachoengsao 24150 Thailand
Tel : +66 (0) 38 581676-81
Fax : +66 (0) 38 581415
Email : factory@ligmanlighting.com
Website : www.ligmanlighting.com

Product specification data sheet and all information is property of Ligman Lighting Co.,Ltd. All rights reserved.
We reserved the right to change specification without prior notice.

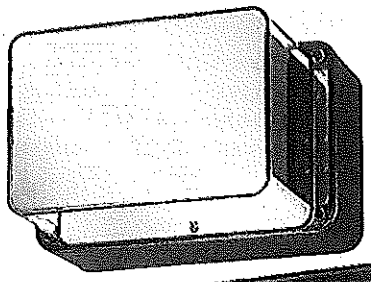

Lamp Included!

E5 Series (shown with Gold Shroud option)

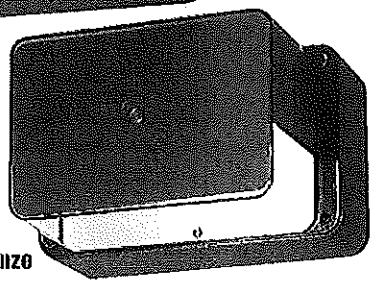

E8 Series (shown with Bronze Shroud option)

Up/Down Cutoff & Deep Shielded

E5 Series Up/Down Cutoff

The optics provide controlled uplight and downlight with side cutoff. The E5 Series optics are also available for vertical mounting; add suffix 'R' to catalog number.

NOTE: 50-watt MH with suffix 'G' is supplied with a glass insert to allow operation in the wall-mounted position.

E8 Series Deep Shielded

Front brightness shielding without sacrificing wide light distribution. The E8 works ideally over entrances.

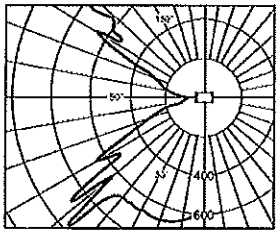

Candlepower Distribution Curve of 50W HPS E5 Up/Down Cutoff Light.

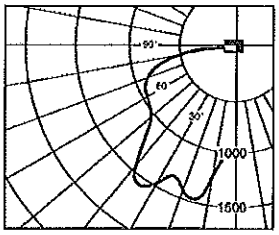

Candlepower Distribution Curve of 70W HPS E8 Deep Shielded Light.

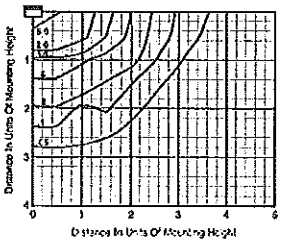

Isofootcandle plot of one 50W HPS E5 Up/Down Cutoff Light at 10' (3.0 m) mounting height (plan view).

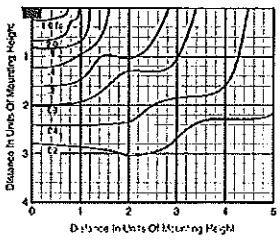

Isofootcandle plot of one 70W HPS E8 Deep Shielded Light at 15' (4.6 m) mounting height (plan view).

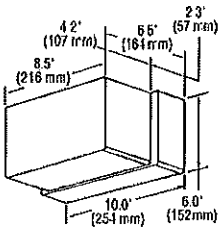

For 50, 70 and 100W HPS with quad-volt or tri-volt, and all MH fixtures, the housing depth is 3" (76 mm), and the overall fixture depth is 7.2" (183 mm).

Order Information

Description	Wattage/ Lamp Type	Catalog Number	Mounting Position
Up/Down Cutoff	50W MH	E5405-MG	Wall
	35W HPS	E5503-1	Any
	50W HPS	E5505-1	Any
Deep Shielded	50W MH	E8405-M	Wall Downlight only
	70W MH	E8407-M	Wall Downlight only
	35W HPS	E8503-1	Any
	50W HPS	E8505-1	Any
	70W HPS	E8507-1	Wall Downlight only
	100W HPS	E8510-1	Wall Downlight only

NOTE: Suffix 'G' indicates glass insert is supplied.

Options: (Factory-Installed) Description	Change Suffix To	Add After Suffix
277V ballast (35–50W HPS only)	2	
347V ballast (50W HPS only)	6	
Quad-volt ballast (70–100W HPS only)	M	
Tri-volt ballast (50 & 70W MH only)	T	
Tri-volt ballast (70 & 100W HPS only)	T	
Photocell (120V, 277V, 208V, 240V or 347V)	1, 2, 3, 4 or 6	P
Bronze Color Shroud		BS
Gold Color Shroud (not available on 100W HPS)		GS
High Power Factor ballast		H
Tamperproof Lens Fasteners		J
Vertical Mounting (E5 Series only)		R
NOTE: Not available when both hpf and photocell supplied		
Polycarbonate Lens		V

Accessories: (Field-Installed) Description	Catalog Number
Surface Mounting Box	ESB-7
Pole Mounting Bracket	PAS-7
Tamperproof Screwdriver	TPS-1

Catalog Number Logic/Voltage Suffix Key ..... Page 9
Bollard Panel ..... Page 31
Accessories ..... Page 39

E5 Series Mounting Multipliers

Height	Multiplier
7' (2.1 m)	2.04
8' (2.4 m)	1.56
9' (2.7 m)	1.23
10' (3.0 m)	1.00
12' (3.7 m)	0.69
15' (4.6 m)	0.44
20' (6.1 m)	0.25

E8 Series Mounting Multipliers

Height	Multiplier
8' (2.4 m)	3.52
10' (3.0 m)	2.25
12' (3.7 m)	1.56
15' (4.6 m)	1.00
20' (6.1 m)	0.56
25' (7.6 m)	0.36

The E5 Series photometric data was developed in testing Ruud fixtures with clear, 50W HPS 4,000 lumen medium base lamps. Footcandle readings for other wattages and lamp types may be obtained by multiplying the chart values by the following:

Lamp/Wattages	Multiplier
50W MH	0.85
35W HPS	0.56

The E Series photometric data in this section was developed in testing Ruud fixtures with clear, 70W HPS 6,400 lumen medium base lamps. Footcandle readings for other wattages and lamp types may be obtained by multiplying the chart values by the following:

Lamp/Wattages	Multiplier
50W MH	0.53
70W MH	0.86
35W HPS	0.35
50W HPS	0.63
100W HPS	1.48

Fast Shipping... DIRECT!
(800) 236-7000, 7 a.m. to 6 p.m. CT
Fax: (800) 236-7500 • www.ruudlighting.com

MADRAX DIVISION

TRILARY, INC.
1080 UNIEK DRIVE
WAUNAKEE, WI 53597
P(800) 448-7931, P(608) 849-1080, F(608) 849-1081
WWW.MADRAX.COM, E-MAIL: SALES@MADRAX.COM

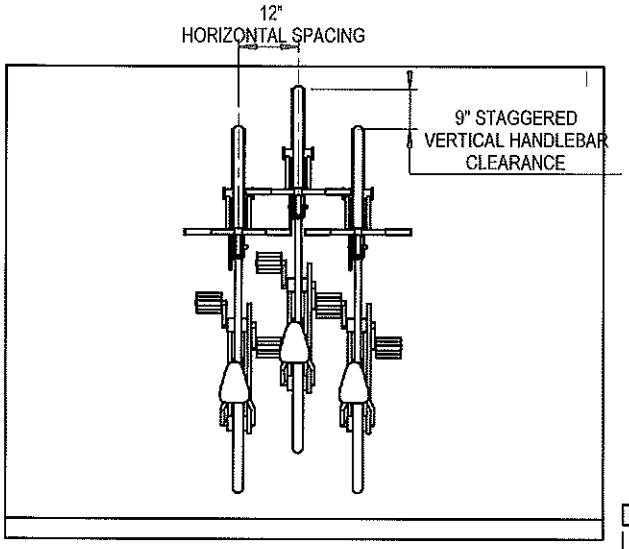

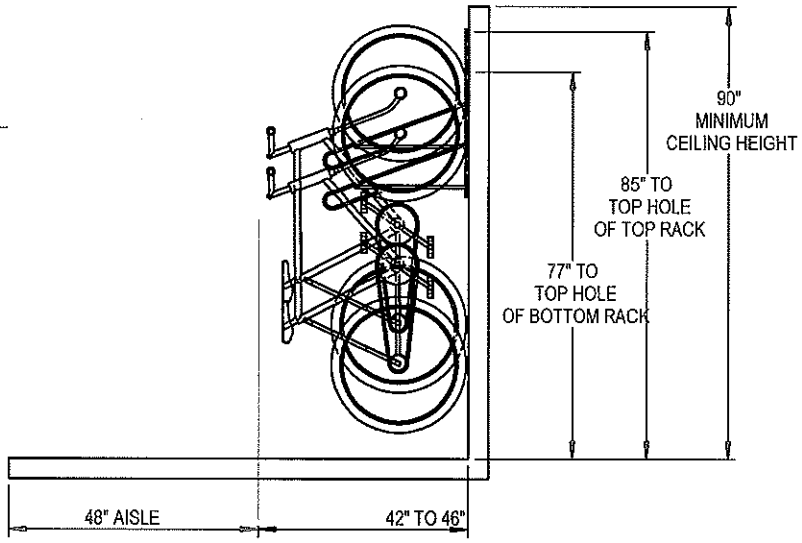

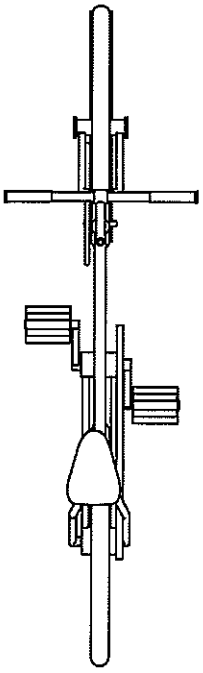

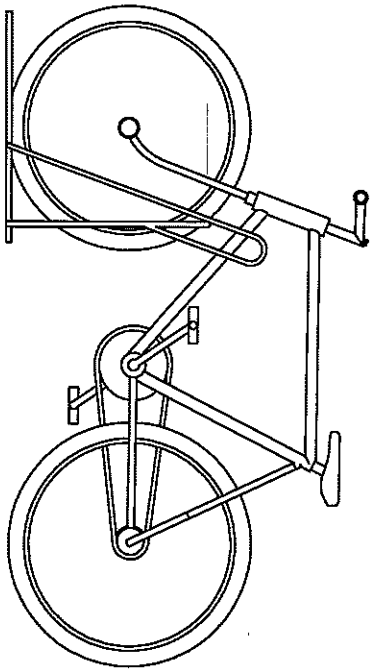

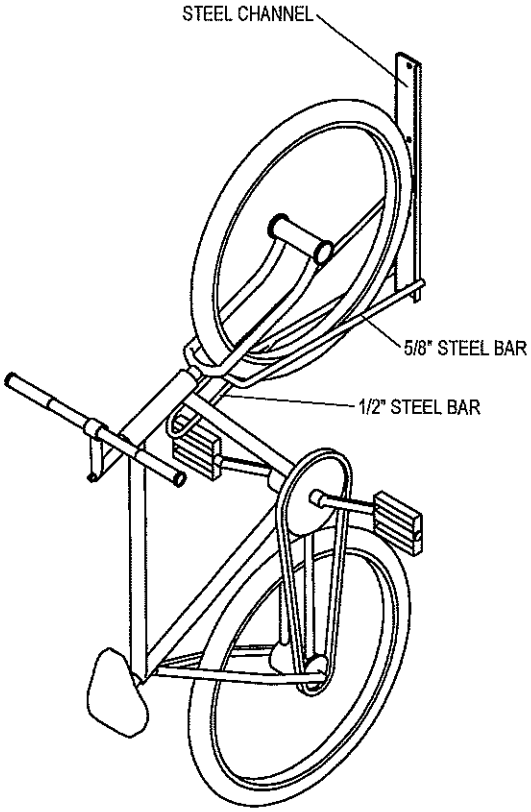

PRODUCT: BSV-1-WM
DESCRIPTION: BIKE STORAGE VERTICAL, 1 BIKE, WALL MOUNT

DATE: 8-7-09
ENG: BLW

CONFIDENTIAL DRAWING AND INFORMATION IS NOT TO BE COPIED OR DISCLOSED TO OTHERS WITHOUT THE CONSENT OF TRILARY, INC. SPECIFICATIONS ARE SUBJECT TO CHANGE WITHOUT NOTICE.

©2007 TRILARY, INC. ALL PROPRIETARY RIGHTS RESERVED.

NOTES:
1. INSTALL BIKE RACKS ACCORDING TO MANUFACTURER'S SPECIFICATIONS.
2. CONSULTANT TO SELECT COLOR(FINISH), SEE MANUFACTURER'S SPECIFICATIONS.
3. SEE SITE PLAN FOR LOCATION OR CONSULT OWNER.

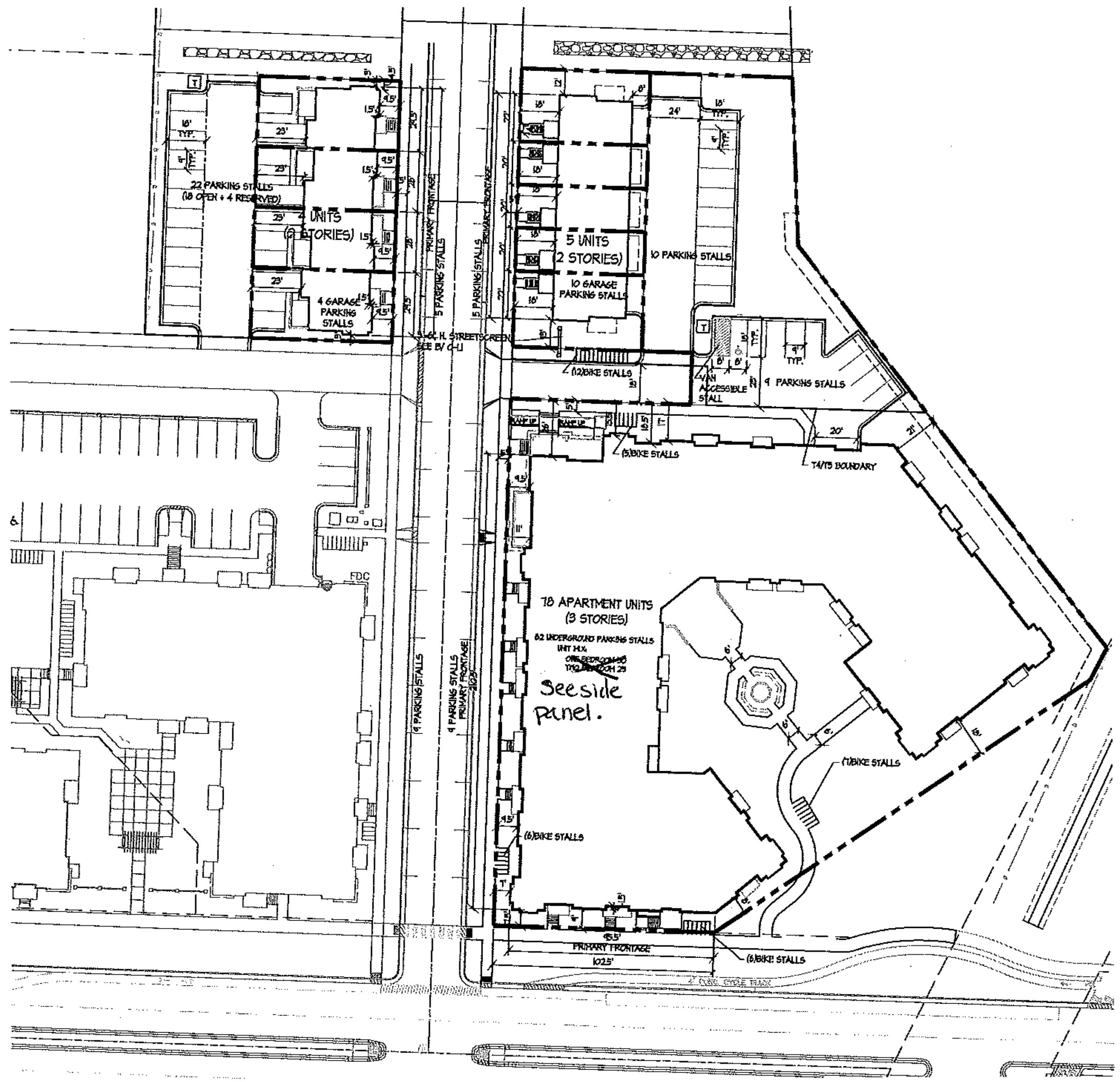

SITE PLAN

1" = 50'

GRAPHIC SCALE

30 0 15 30 60

(IN FEET)

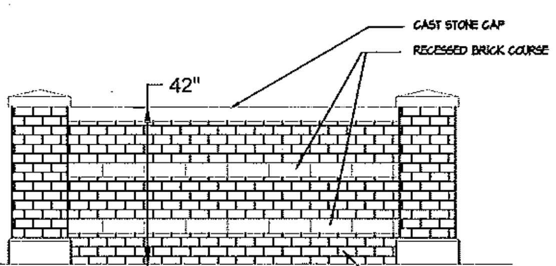

B TYPICAL STREETSCREEN & FENCE

N.T.S.

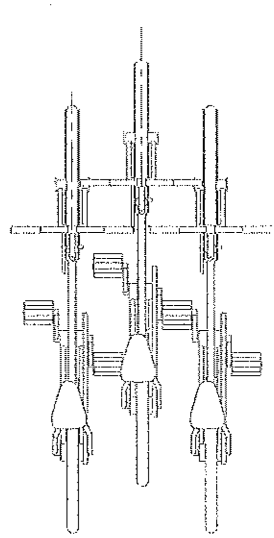

A WALL MOUNTED BIKE RACK AT BASEMENT

N.T.S.

SHEET INDEX:

SITE

C-1.1	SITE PLAN
C-1.2	SITE LIGHTING PLAN
C-1.3	SITE PLAN 2
C-1.0	EXISTING CONDITIONS AND SITE DEMOLITION
C-2.0	SITE UTILITY PLAN
C-3.0	PARTIAL GRADING & EROSION CONTROL PLAN
C-3.1	PARTIAL GRADING & EROSION CONTROL PLAN
C-4.0	CONSTRUCTION DETAILS
C-4.1	CONSTRUCTION DETAILS
C-4.2	CONSTRUCTION DETAILS
L-1.1	LANDSCAPE PLAN

ARCHITECTURAL

A-1.0	BASEMENT PLAN - BUILDING #3
A-1.1	BASEMENT PLAN 5 & 4 UNIT
A-2.1	ELEVATIONS - BUILDING #3
A-2.2	ELEVATIONS - 5 UNIT
A-2.3	ELEVATIONS - 4 UNIT
A-3.1	BUILDING SECTION

SITE DEVELOPMENT STATISTICS - LOT 54 T5 & T4

LOT AREA	64,815 S.F./ 1.49 ACRES
	T5 = 52,336 sf T4 = 12,479 sf
LOT COVERAGE	42,443 SF = 65%
	T4 = 7777sf = 62% T5 = 34,706 sf = 66%
DWELLING UNITS	78 UNITS
LOT AREA/ D.U.	831 SF/D.U. SITE
	671 SF/D.U. FOR T5
DENSITY	53 UNITS/ACRE SITE
	65 UNITS/ACRE FOR T5
APARTMENTS	
STUDIO	6
ONE BEDROOM	44
TWO BEDROOM	28
TOTAL	78
PARKING	
SURFACE	19
STREET	4
UNDERGROUND	82
TOTAL	105
BIKE PARKING	
UNDERGROUND	82
EXTERIOR	24+ 4 (SHARED WITH OUTLOT 29)
TOTAL	105

SITE DEVELOPMENT STATISTICS - LOT 18-21 T4

LOT AREA	7743 S.F./ .18 ACRES
LOT COVERAGE	6,295 SF = 81%
LOT 18	1616/2146 SF = 75%
LOT 19	1602/1846 SF = 87%
LOT 20	1600/1846 SF = 87%
LOT 21	1474/2144 SF = 69%
DWELLING UNITS	4 UNITS
LOT AREA/ D.U.	1936 SF/D.U.
DENSITY	22 UNITS/ACRE
APARTMENTS	
TWO BEDROOM	4
TOTAL	4
PARKING	
RESERVE	4
STREET	2
GARAGE	4
TOTAL	10
BIKE PARKING	
UNDERGROUND	8 (WALL MOUNTED SEE A/C-1.1)
EXTERIOR	4 SHARED WITH OUTLOT 29
TOTAL	12

SITE DEVELOPMENT STATISTICS - LOT 49-53 T4

LOT AREA	7723 S.F./ .18 ACRES
LOT COVERAGE	5,123 SF = 66%
LOT 49	1086/2024 SF = 53%
LOT 50	1006/1200 SF = 84%
LOT 51	953/1200 SF = 79%
LOT 52	953/1200 SF = 79%
LOT 53	1145/2099 SF = 55%
DWELLING UNITS	5 UNITS
LOT AREA/ D.U.	1544 SF/D.U.
DENSITY	28 UNITS/ACRE
APARTMENTS	
TWO BEDROOM	5
TOTAL	5
PARKING	
RESERVE	5
STREET	2
GARAGE	10
TOTAL	17
BIKE PARKING	
UNDERGROUND	10 (WALL MOUNTED SEE A/C-1.1)
EXTERIOR	4 NOT ONSITE SHARED WITH OUTLOT 29
TOTAL	14

RECEIVED 8/30/2013

Revised City-July 25, 2013
Revised City-August 9, 2013
Revised City-August 28, 2013

Riva - Phase II

Site Plan

1316 C-1.1

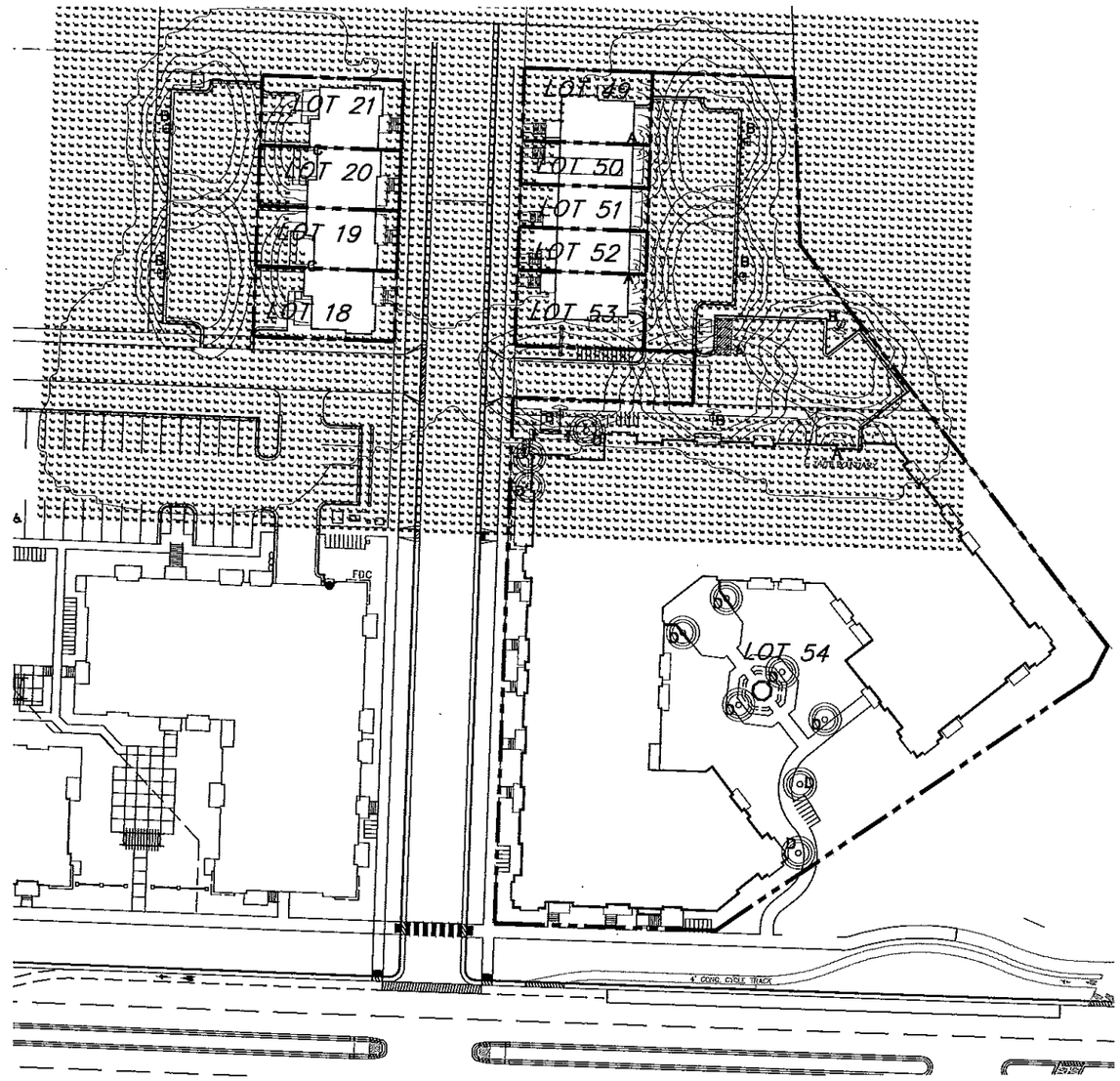

SITE LIGHTING PLAN

1" = 50'

N

GRAPHIC SCALE

30 0 15 30 60

(IN FEET)

KNOTHE & BRUCE ARCHITECTS
7601 University Avenue Suite 201
Middleton, Wisconsin 53562
608-836-3690 Fax 836-6934

Consultant

Notes

LIGHTING STATISTICS						
Description	Symbol	Avg	Max	Min	Max/Min	Avg/Min
WEST PARKING / DRIVE	+	1.3 fc	5.0 fc	0.4 fc	12.5:1	3.25:1
EAST PARKING / DRIVE	+	1.6 fc	16.8 fc	0.4 fc	42:1	4.0:1

LIGHTING SCHEDULE								
Symbol	Label	Qty	Manufacturer	Catalog Number	Description	Lamp	File	Mounting
	A	3	RUUD LIGHTING	E8407	RECTANGULAR SECURITY / DEEP SHIELDED	70 WATT MH	E8507JES	8'-0" UP ON SIDE OF BUILDING
	B	7	RUUD LIGHTING	WAC4195BL	15" WEDGE/AREA CUTOFF W/BACK LT. SHIELD	100W MH	WAC4175BLJ es.	16'-6" POLE ON 2'-0" TALL CONC. BASE
	C	2	RUUD LIGHTING	E8407	RECTANGULAR SECURITY / DEEP SHIELDED	70 WATT MH	E8507JES	16'-0" UP ON SIDE OF BUILDING
	D	7	LIGMAN LIGHTING	10052	ROMEO BOLLARD	CF-D 26W / 827 SYLVANIA	10052.ies	AT GRADE ON FLUSH CONC. BASE

EXAMPLE LIGHT FIXTURE DISTRIBUTION

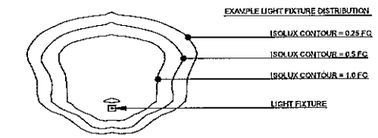

Revisions
Revised City-July 25, 2013

Project Title
Riva - Phase II

Drawing Title
Site Lighting Plan

Project No. 1316

Drawing No. C-1.2

This document consists confidential or proprietary information of Knothe & Bruce Architects. Neither the documents nor the information herein is to be reproduced, distributed, used, or disclosed, alone in whole or in part, except as specifically authorized by Knothe & Bruce Architects. Knothe & Bruce Architects is a Limited Liability Company of Wisconsin.

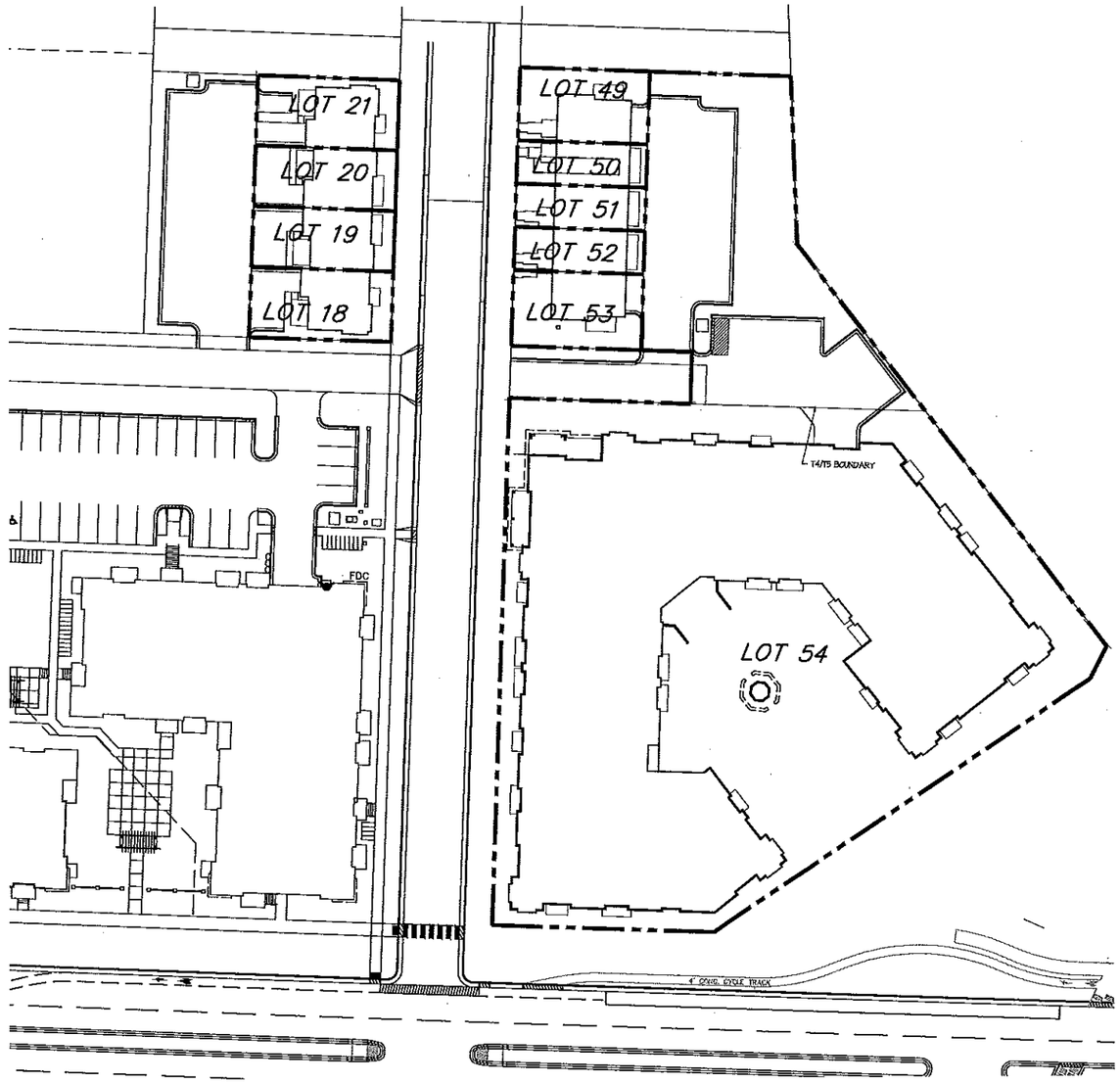

SITE PLAN

1" = 50'

GRAPHIC SCALE

30 0 15 30 60

(IN FEET)

KNOTHE & BRUCE ARCHITECTS
7601 University Avenue Suite 201
Middleton, Wisconsin 53562
608-836-3690 Fax 836-6934

Consultant

Notes

Revisions

Revised City-July 25, 2013

Project Title

Riva - Phase II

Drawing Title

Site Plan 2

Project No. 1316

Drawing No. C-1.3

This document contains confidential or proprietary information of Knothe & Bruce Architects. Neither this document nor the information herein is to be reproduced, distributed, used, or disclosed, either in whole or in part, except as specifically authorized by Knothe & Bruce Architects. Knothe & Bruce Architects is a Limited Liability Company of Wisconsin.

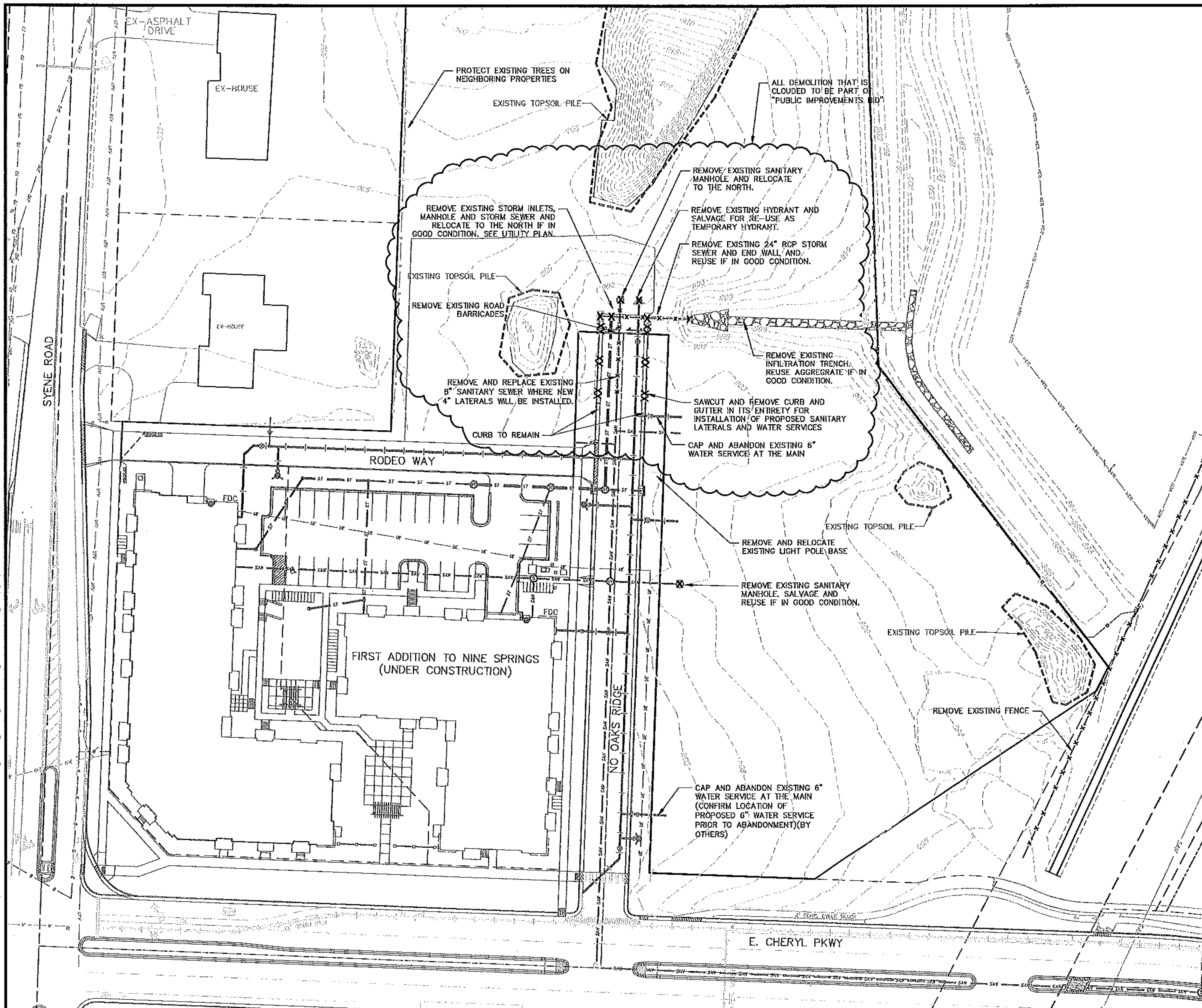

N

GRAPHIC SCALE FEET

0 15 30 60

DEMOLITION PLAN LEGEND

- CURB AND GUTTER REMOVAL
- SAWCUT
- UTILITY STRUCTURE REMOVAL
- UTILITY LINE REMOVAL
- FENCE REMOVAL

GENERAL NOTES

1. NO TREES ARE TO BE REMOVED WITHOUT THE APPROVAL OF THE ENGINEER.
2. ALL WORK SHALL BE COMPLETED IN ACCORDANCE WITH THE CITY OF FITCHBURG STANDARD SPECIFICATIONS FOR PUBLIC WORKS CONSTRUCTION, JANUARY 2013.
3. CONTRACTOR SHALL OBTAIN ANY NECESSARY WORK IN RIGHT-OF-WAY, EXCAVATION, UTILITY CONNECTION, PLUGGING, ABANDONMENT, AND DRIVEWAY CONNECTION PERMITS PRIOR TO CONSTRUCTION.
4. MMSD AND SYENE SANITARY SEWER INTERCEPTOR FEES NEED TO BE PAID PRIOR TO PLAT APPROVAL.
5. RECYCLED CONCRETE IS NOT ALLOWED TO BE USED AS A BASE FOR ANY CONSTRUCTION.

DEMOLITION NOTES

1. COORDINATE EXISTING UTILITY REMOVAL WITH LOCAL AUTHORITIES AND UTILITY COMPANIES HAVING JURISDICTION.
2. ALL SAWCUTTING SHALL BE FULL DEPTH TO PROVIDE A CLEAN EDGE TO MATCH NEW CONSTRUCTION. MATCH EXISTING ELEVATIONS AT POINTS OF CONNECTION FOR NEW AND EXISTING PAVEMENT, CURB, SIDEWALKS, ETC. ALL SAWCUT LOCATIONS SHOWN ARE APPROXIMATE AND MAY BE FIELD ADJUSTED TO ACCOMMODATE CONDITIONS, JOINTS, MATERIAL TYPE, ETC. REMOVE MINIMUM AMOUNT NECESSARY FOR INSTALLATION OF PROPOSED IMPROVEMENTS.
3. CONTRACTOR SHALL PROVIDE AND SHALL BE RESPONSIBLE FOR ANY NECESSARY TRAFFIC CONTROL AND SAFETY MEASURES DURING DEMOLITION AND CONSTRUCTION OPERATIONS WITHIN OR NEAR THE PUBLIC ROADWAY. TRAFFIC CONTROL SHALL BE PER MUTCD.
4. ALL TREES TO BE REMOVED SHALL BE REMOVED IN THEIR ENTIRETY AND STUMPS SHALL BE GROUND TO PROPOSED SUBGRADE.
5. PROVIDE TREE PROTECTION FENCING PRIOR TO CONSTRUCTION OPERATIONS. MAINTAIN THROUGHOUT CONSTRUCTION.

vierbicher
planners | engineers | advisors
REEDSBURG - MADISON - PRAIRIE DU CHIEN
999 Fourier Drive, Suite 201 Madison, Wisconsin 53717
Phone: (608) 826-0532 Fax: (608) 826-0530

EXISTING CONDITIONS/DEMOLITION PLAN

RIVA BUILDINGS 3, 4 AND 5
NO OAKS RIDGE
CITY OF FITCHBURG, DANE COUNTY, WISCONSIN

REVISIONS

NO.	DATE	REMARKS
1	7-18-13	BID PLANS
2	7-25-13	CITY COMMENTS

SCALE: AS SHOWN
DATE: 6-11-13
DRAFTER: TCOY
CHECKED: JDOY
PROJECT NO.: 130083
SHEET: 2 OF 8
DWG. NO.: C-1.0

©2011 Vierbicher Associates, Inc.

25 Jul 2013 - 10:21a M:\Avante Properties\130083_3rd Addtn to NS-Riva Bldg #3\Engineering\Civil 3D\Eng Base-130083.dwg by: jdoy

©2011 Vierbicher Associates, Inc.

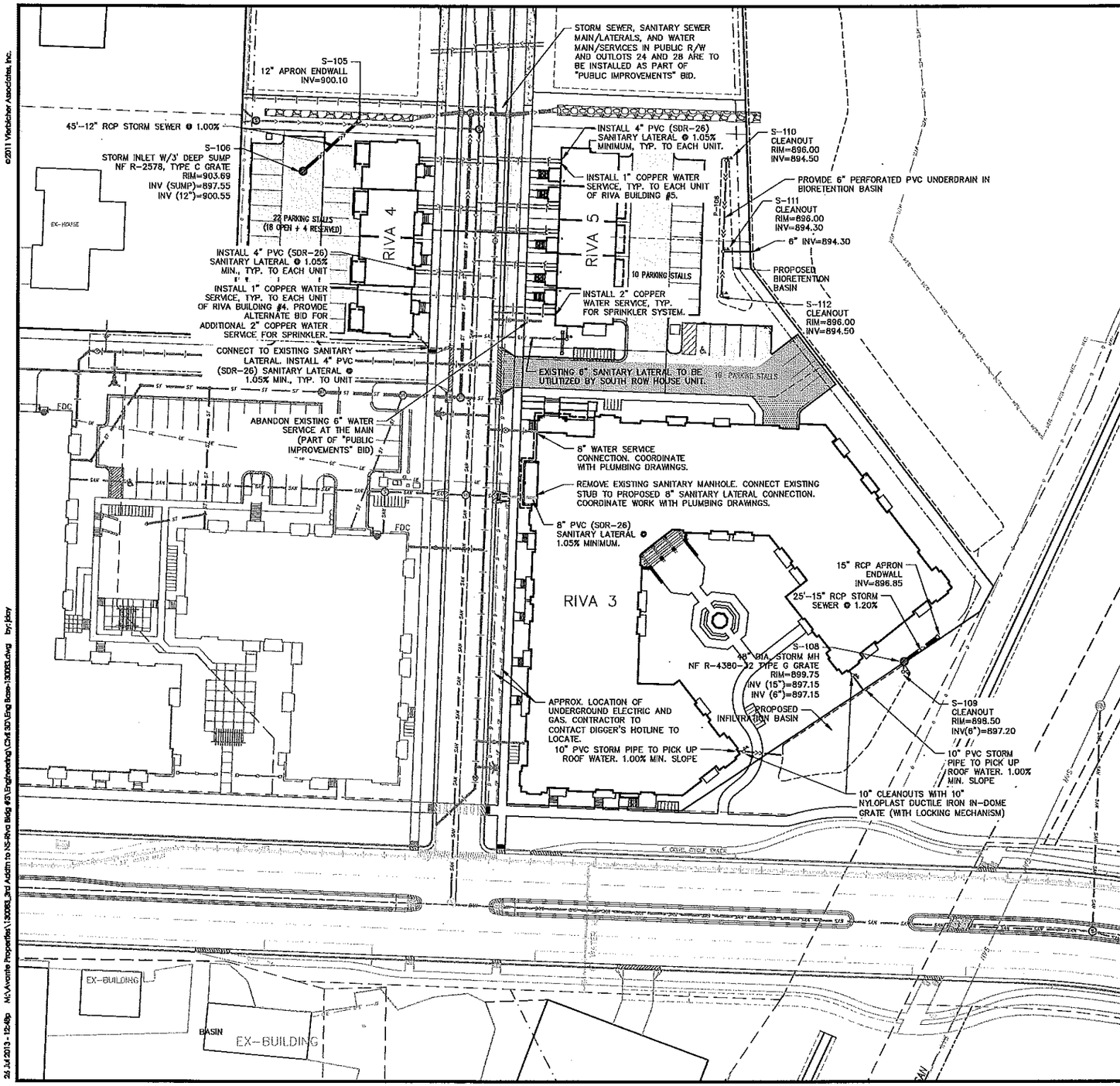

CALL DIGGER'S HOTLINE
1-800-242-8511
TOLL FREE
TELEFAX: 1-800-338-3860
TDD (FOR HEARING IMPAIRED):
1-800-542-2289
WIS. STATUTE 182.0175 (1979)
REQUIRES MINIMUM OF 2 WORKING DAYS
NOTICE BEFORE YOU EXCAVATE.

N
W E
S

GRAPHIC SCALE FEET
0 15 30 60

PROPOSED UTILITY LEGEND

- PROPERTY BOUNDARY
- CURB AND GUTTER
- "DRIVEWAY" CURB AND GUTTER
- PROPOSED ADA DETECTABLE WARNING FIELD
- PROPOSED SIGN
- PROPOSED LIGHT POLE
- PROPOSED HANDICAP PARKING
- PROPOSED CONCRETE SIDEWALK
- PROPOSED HEAVY DUTY CONCRETE
- PROPOSED TYPICAL ASPHALT PAVEMENT
- PROPOSED HEAVY DUTY ASPHALT PAVEMENT
- STORM SEWER PIPE
- STORM SEWER MANHOLE
- STORM SEWER FIELD INLET
- STORM SEWER CURB INLET
- STORM SEWER ENDWALL
- SANITARY MANHOLE
- SANITARY SEWER PIPE (GRAVITY)
- SANITARY SEWER CLEANOUT
- WATER MAIN
- FIRE HYDRANT
- WATER VALVE
- GAS MAIN
- ELECTRIC SERVICE

UTILITY NOTES

1. SANITARY & STORM SEWER LENGTHS ARE SHOWN FROM CENTER OF STRUCTURE TO CENTER OF STRUCTURE. STORM SEWER END SECTIONS ARE INCLUDED IN THE LENGTH AND SLOPE OF THE PIPE. PIPE WILL BE PAID FOR FROM CENTER OF STRUCTURE TO CENTER OF STRUCTURE AND END SECTIONS WILL BE PAID FOR PER EACH.
2. CONTRACTOR SHALL INVESTIGATE ALL UTILITY CROSSINGS PRIOR TO CONSTRUCTION AND NOTIFY ENGINEER OF ANY CONFLICTS.
3. CONTRACTOR SHALL BE RESPONSIBLE FOR ADJUSTING ALL UTILITY STRUCTURES (MANHOLE RIMS, WATER VALVES, AND CURB STOPS).
4. FOR ALL SEWER AND WATER MAIN CROSSINGS: PROVIDE MINIMUM 18" SEPARATION WHEN WATER MAIN CROSSES BELOW SEWER AND MINIMUM 6" SEPARATION WHEN WATER MAIN CROSSES ABOVE SEWER.
5. IF DEWATERING OPERATIONS EXCEED 70 GALLONS PER MINUTE OF PUMPING CAPACITY, A DEWATERING WELL PERMIT SHALL BE OBTAINED FROM THE DEPARTMENT PRIOR TO STARTING ANY DEWATERING ACTIVITIES.
6. ALL WATER SYSTEM MATERIALS SHALL BE MANUFACTURED IN THE UNITED STATES AND BE LABELED AS SUCH. USE OF FOREIGN MATERIALS IS PROHIBITED.
7. A COPY OF THE APPROVED UTILITY PLANS, SPECIFICATIONS AND PLUMBING PERMIT APPROVAL LETTER SHALL BE ON-SITE DURING CONSTRUCTION AND OPEN TO INSPECTION BY AUTHORIZED REPRESENTATIVES OF THE DEPARTMENT OF COMMERCE AND OTHER LOCAL INSPECTORS.
8. STORM BUILDING SEWER PIPE SHALL CONFORM TO ONE OF THE STANDARDS LISTED IN TABLE 384.30-6 OF SPS 384.30(3)(c).
9. PRIVATE WATER SERVICES AND PRIVATE WATER MAINS SHALL CONFORM TO ONE OF THE STANDARDS LISTED IN TABLE 384.30-7 OF SPS 384.30(4)(d).
10. PRIVATE SANITARY SEWER AND LATERALS **WITHIN THE LOTS** SHALL BE POLYVINYL CHLORIDE (PVC) ASTM D3034 -- SDR 35 OR APPROVED EQUAL MATERIAL THAT CONFORMS TO ONE OF THE STANDARDS LISTED IN TABLE 384.30-3 OF SPS 384.30(2)(c).
11. A MEANS TO LOCATE BURIED UNDERGROUND EXTERIOR NON METALLIC SEWERS/MAINS AND WATER SERVICES/MAINS MUST BE PROVIDED WITH TRACER WIRE OR OTHER METHODS IN ORDER TO BE LOCATED PER SPS 382.10(11)(h) AND SPS 382.40(8)(k).
12. EXTERIOR WATER SUPPLY PIPING SETBACKS AND CROSSINGS SHALL BE IN ACCORDANCE WITH SPS 382.40(8)(b.).
13. NO PERSON MAY ENGAGE IN PLUMBING WORK IN THE STATE UNLESS LICENSED TO DO SO BY THE DEPARTMENT OF SAFETY AND PROFESSIONAL SERVICES PER S.145.06.
14. SITE CONTRACTOR SHALL LEAVE SANITARY AND WATER LATERALS FIVE (5) FEET SHORT (HORIZONTALLY) FROM THE BUILDING. BUILDING PLUMBER SHALL VERIFY SIZE AND EXACT LOCATION OF PROPOSED SANITARY AND WATER LATERALS.
15. CONTRACTOR SHALL FIELD VERIFY THE SIZE, TYPE, LOCATION, AND ELEVATION OF EXISTING UTILITIES PRIOR TO INSTALLING ANY ON-SITE UTILITIES OR STRUCTURES. CONTACT ENGINEER PRIOR TO INSTALLATION IF DISCREPANCY EXISTS WITHIN THESE PLANS.
16. PROPOSED UTILITY SERVICE LINES AS SHOWN ARE APPROXIMATE. COORDINATE THE EXACT LOCATIONS WITH THE PLUMBING DRAWINGS. COORDINATE THE LOCATIONS WITH THE PLUMBING CONTRACTOR AND/OR OWNER'S CONSTRUCTION REPRESENTATIVE PRIOR TO INSTALLATION OF ANY NEW UTILITIES.
17. CONTRACTOR SHALL BE RESPONSIBLE FOR COORDINATING THE RELOCATION OF ANY UTILITIES ENCOUNTERED AND REPLACEMENT OF ANY UTILITIES DAMAGED WITHIN INFLUENCE ZONE OF NEW CONSTRUCTION. CONTACT ENGINEER IF THE EXISTING UTILITIES VARY APPRECIABLY FROM THE PLANS.
18. ALL WATER MAIN AND SERVICES SHALL BE INSTALLED AT A MINIMUM DEPTH OF 6.5' FROM TOP OF FINISHED GROUND ELEVATION TO TOP OF MAIN.
19. CLEAN OUT ALL EXISTING AND PROPOSED STORM INLETS AND CATCH BASINS AT THE COMPLETION OF CONSTRUCTION.

vierbicher
planners | engineers | advisors
VIERBICHER - MADISON - PRAIRIE DU CHIEN
999 Fourier Drive, Suite 201, Madison, Wisconsin 53717
Phone: (608) 826-0532 Fax: (608) 826-0530

SITE UTILITY PLAN

RIVA BUILDINGS 3, 4 AND 5
NO OAKS RIDGE
CITY OF FITCHBURG, DANE COUNTY, WISCONSIN

REVISIONS			
NO.	DATE	REMARKS	

REVISIONS			
NO.	DATE	REMARKS	
1	7-18-13	BID PLANS	
2	7-25-13	CITY COMMENTS	

SCALE: AS SHOWN
DATE: 6-11-13
DRAFTER: TCOY
CHECKED: JDOY
PROJECT NO.: 130083
SHEET: 3 OF 8
DWG. NO.: C-2.0

25 Jul 2013 - 12:48p M:\Avante Properties\130083_3rd Addtn to NS-Riva Bldg #3\Engineering\Civil 3D\Eng Base-130083.dwg by:jdoy

©2011 Vierbicher Associates, Inc.

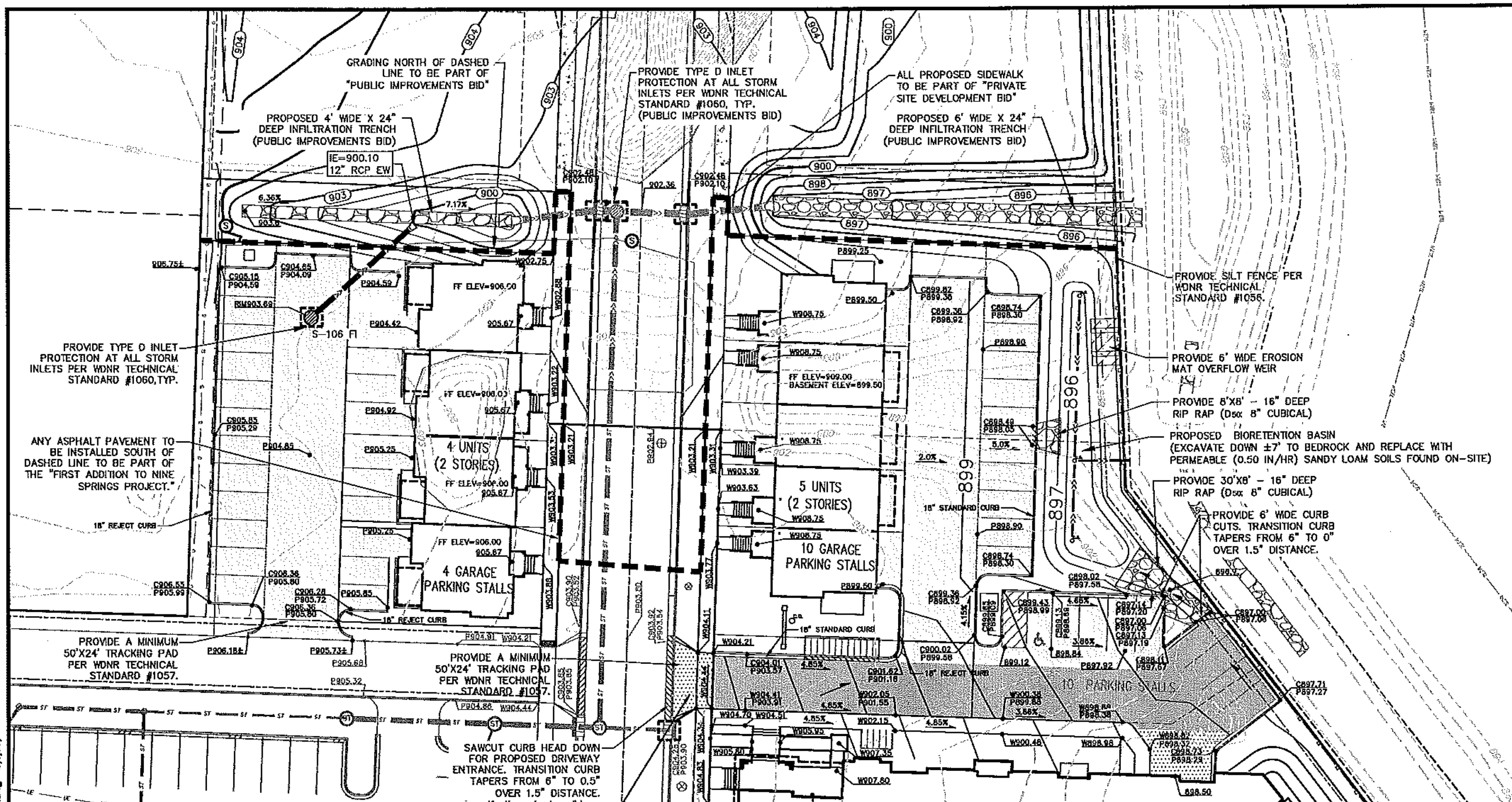

LEGEND

- PROPERTY BOUNDARY
- CURB AND GUTTER
- "DRIVEWAY" CURB AND GUTTER
- PROPOSED ADA DETECTABLE WARNING FIELD
- PROPOSED SIGN
- PROPOSED LIGHT POLE
- PROPOSED HANDICAP PARKING
- PROPOSED CONCRETE SIDEWALK
- PROPOSED HEAVY DUTY CONCRETE
- PROPOSED TYPICAL ASPHALT PAVEMENT
- PROPOSED HEAVY DUTY ASPHALT PAVEMENT
- STORM SEWER PIPE
- STORM SEWER MANHOLE
- STORM SEWER FIELD INLET
- STORM SEWER CURB INLET
- 820 EXISTING MAJOR CONTOURS
- 818 EXISTING MINOR CONTOURS
- 820 PROPOSED MAJOR CONTOURS
- 818 PROPOSED MINOR CONTOURS
- PROPOSED ADA ACCESSIBLE ROUTE
- SILT FENCE OR SILT SOCK
- 2.92% PROPOSED SLOPE ARROWS
- C906.55 PROPOSED SPOT ELEVATIONS
- 1048.61 EXISTING SPOT ELEVATIONS
- TYPE D INLET PROTECTION
- RIP RAP

ABBREVIATIONS

C – TOP OF CURB
FF – FINISHED FLOOR
W – TOP OF WALK
P – EDGE OF PAVEMENT
R – RISERS

EROSION CONTROL NOTES:

1. EROSION CONTROL SHALL BE IN ACCORDANCE WITH THE CITY OF FITCHBURG EROSION CONTROL ORDINANCE AND CHAPTER NR 216 OF THE WISCONSIN ADMINISTRATIVE CODE.
2. CONSTRUCT AND MAINTAIN ALL EROSION AND SEDIMENT CONTROL MEASURES IN ACCORDANCE WITH WISCONSIN DNR TECHNICAL STANDARDS (HTTP://DNR.WI.GOV/RUNOFF/STORMWATER/TECHSTDS.HTM).
3. INSTALL SEDIMENT CONTROL PRACTICES (TRACKING PAD, PERIMETER SILT FENCE, SEDIMENT BASINS, ETC.) PRIOR TO INITIATING OTHER LAND DISTURBING CONSTRUCTION ACTIVITIES.
4. THE CONTRACTOR IS REQUIRED TO MAKE EROSION CONTROL INSPECTIONS AT THE END OF EACH WEEK AND WHEN 0.5 INCHES OF RAIN FALLS WITHIN 24 HOURS. INSPECTION REPORTS SHALL BE PREPARED AND FILED AS REQUIRED BY THE DNR AND/OR CITY. ALL MAINTENANCE WILL FOLLOW AN INSPECTION WITHIN 24 HOURS.
5. EROSION CONTROL IS THE RESPONSIBILITY OF THE CONTRACTOR UNTIL SITE IS ESTABLISHED. EROSION CONTROL MEASURES AS SHOWN SHALL BE THE MINIMUM PRECAUTIONS THAT WILL BE ALLOWED. ADDITIONAL EROSION CONTROL MEASURES, AS REQUESTED IN WRITING BY THE STATE OR LOCAL INSPECTORS, OR THE DEVELOPER'S ENGINEER, SHALL BE INSTALLED WITHIN 24 HOURS.
6. A 3" CLEAR STONE TRACKING PAD SHALL BE INSTALLED AT THE END OF ROAD CONSTRUCTION LIMITS TO PREVENT SEDIMENT FROM BEING TRACKED ONTO THE ADJACENT PAVED PUBLIC ROADWAY. SEDIMENT TRACKING PAD SHALL CONFORM TO WISDNR TECHNICAL STANDARD 1057. SEDIMENT REACHING THE PUBLIC ROAD SHALL BE REMOVED BY STREET CLEANING (NOT HYDRAULIC FLUSHING) BEFORE THE END OF EACH WORK DAY AND AS DIRECTED BY CITY.
7. CHANNELIZED RUNOFF: FROM ADJACENT AREAS PASSING THROUGH THE SITE SHALL BE DIVERTED AROUND DISTURBED AREAS.
8. STABILIZED DISTURBED GROUND: ANY SOIL OR DIRT PILES WHICH WILL REMAIN IN EXISTENCE FOR MORE THAN 7-CONSECUTIVE DAYS, WHETHER TO BE WORKED DURING THAT PERIOD OR NOT, SHALL NOT BE LOCATED WITHIN 25-FEET OF ANY ROADWAY, PARKING LOT, PAVED AREA, OR DRAINAGE STRUCTURE OR CHANNEL (UNLESS INTENDED TO BE USED AS PART OF THE EROSION CONTROL MEASURES). TEMPORARY STABILIZATION AND CONTROL MEASURES (SEEDING, MULCHING, TARPING, EROSION MATTING, BARRIER FENCING, ETC.) ARE REQUIRED FOR THE PROTECTION OF DISTURBED AREAS AND SOIL PILES, WHICH WILL REMAIN UN-WORKED FOR A PERIOD OF MORE THAN 14-CONSECUTIVE CALENDAR DAYS. THESE MEASURES SHALL REMAIN IN PLACE UNTIL SITE HAS STABILIZED.
9. SITE DE-WATERING: WATER PUMPED FROM THE SITE SHALL BE TREATED BY TEMPORARY SEDIMENTATION BASINS OR OTHER APPROPRIATE CONTROL MEASURES. SEDIMENTATION BASINS SHALL HAVE A DEPTH OF AT LEAST 3 FEET, BE SURROUNDED BY SNOWFENCE OR EQUIVALENT BARRIER AND HAVE SUFFICIENT SURFACE AREA TO PROVIDE A SURFACE SETTLING RATE OF NO MORE THAN 750 GALLONS PER SQUARE FOOT PER DAY AT THE HIGHEST DEWATERING PUMPING RATE. WATER MAY NOT BE DISCHARGED IN A MANNER THAT CAUSES EROSION OF THE SITE, A NEIGHBORING SITE, OR THE BED OR BANKS OF THE RECEIVING WATER. POLYMERS MAY BE USED AS DIRECTED BY DNR TECHNICAL STANDARD 1061 (DE-WATERING).
10. WASHED STONE WEEPERS OR TEMPORARY EARTH BERMS SHALL BE BUILT PER PLAN BY CONTRACTOR TO TRAP SEDIMENT OR SLOW THE VELOCITY OF STORM WATER.
11. SEE DETAIL SHEETS FOR RIP-RAP SIZING. IN NO CASE WILL RIP-RAP BE SMALLER THAN 3" TO 6".
12. INLET FILTERS ARE TO BE PLACED IN STORMWATER INLET STRUCTURES AS SOON AS THEY ARE INSTALLED. ALL PROJECT AREA STORM INLETS NEED WISCONSIN D.O.T. TYPE D INLET PROTECTION. THE FILTERS SHALL BE MAINTAINED UNTIL SITE IS ESTABLISHED.
13. USE DETENTION BASINS AS SEDIMENT BASINS DURING CONSTRUCTION (DO NOT USE INFILTRATION AREAS). AT THE END OF CONSTRUCTION, REMOVE SEDIMENT AND RESTORE PER PLAN.
14. RESTORATION (SEED, FERTILIZE AND MULCH) SHALL BE PER SPECIFICATIONS ON THIS SHEET UNLESS SPECIAL RESTORATION IS CALLED FOR ON THE LANDSCAPE PLAN OR THE DETENTION BASIN DETAIL SHEET.
15. TERRACES SHALL BE RESTORED WITH 6" TOPSOIL, PERMANENT SEED, FERTILIZER AND MULCH. LOTS SHALL BE RESTORED WITH 6" TOPSOIL, TEMPORARY SEED, FERTILIZER AND MULCH.
16. SEED, FERTILIZER AND MULCH SHALL BE APPLIED WITHIN 7 DAYS AFTER FINAL GRADE HAS BEEN ESTABLISHED. IF DISTURBED AREAS WILL NOT BE RESTORED IMMEDIATELY AFTER ROUGH GRADING, TEMPORARY SEED SHALL BE PLACED.
17. FOR THE FIRST SIX WEEKS AFTER RESTORATION (E.G. SEED & MULCH, EROSION MAT, SOD) OF A DISTURBED AREA, INCLUDE SUMMER WATERING PROVISIONS OF ALL NEWLY SEEDED AND MULCHED AREAS WHENEVER 7 DAYS ELAPSE WITHOUT A RAIN EVENT.
18. EROSION MAT (TYPE I CLASS A PER WISCONSIN D.O.T. P.A.L.) SHALL BE INSTALLED ON ALL SLOPES 5:1 OR GREATER BUT LESS THAN 1:1. EROSION MAT INSTALLED ADJACENT TO WETLAND SHALL BE DESIGNED TO NOT ENTRAP ANIMALS.
19. SOIL STABILIZERS SHALL BE APPLIED TO DISTURBED AREAS WITH SLOPES BETWEEN 10% AND 3:1 (DO NOT USE IN CHANNELS). SOIL STABILIZERS SHALL BE TYPE B, PER WISCONSIN D.O.T. P.A.L. (PRODUCT ACCEPTABILITY LIST), OR EQUAL. APPLY AT RATES AND METHODS SPECIFIED PER MANUFACTURER/THIS SHEET. SOIL STABILIZERS SHALL BE RE-APPLIED WHENEVER VEHICLES OR OTHER EQUIPMENT TRACK ON THE AREA.
20. SILT FENCE OR EROSION MAT SHALL BE INSTALLED ALONG THE CONTOURS AT 100 FOOT INTERVALS DOWN THE SLOPE ON THE DISTURBED SLOPES STEEPER THAN 5% AND MORE THAN 100 FEET LONG THAT SHEET FLOW TO THE ROADWAY UNLESS SOIL STABILIZERS ARE USED.
21. SILT FENCE TO BE USED ACROSS AREAS OF THE LOT THAT SLOPE TOWARDS A PUBLIC STREET OR WATERWAY. SEE DETAILS.
22. SEDIMENT SHALL BE CLEANED FROM CURB AND GUTTER AFTER EACH RAINFALL AND PRIOR TO PROJECT ACCEPTANCE.
23. ACCUMULATED CONSTRUCTION SEDIMENT SHALL BE REMOVED FROM ALL PERMANENT BASINS TO THE ELEVATION SHOWN ON THE GRADING PLAN FOLLOWING THE STABILIZATION OF DRAINAGE AREAS.
24. ALL CONSTRUCTION ENTRANCES SHALL HAVE TEMPORARY ROAD CLOSED SIGNS THAT WILL BE IN PLACE WHEN THE ENTRANCE IS NOT IN USE AND AT THE END OF EACH DAY.
25. ANY PROPOSED CHANGES TO THE EROSION CONTROL PLAN MUST BE SUBMITTED AND APPROVED BY THE CITY OF FITCHBURG.
26. THE CITY, OWNER AND/OR ENGINEER MAY REQUIRE ADDITIONAL EROSION CONTROL MEASURES AT ANY TIME DURING CONSTRUCTION.

SEEDING RATES:

TEMPORARY:
1. USE ANNUAL OATS AT 3.0 LB./1,000 S.F. FOR SPRING AND SUMMER PLANTINGS.
2. USE WINTER WHEAT OR RYE AT 3.0 LB./1,000 SF FOR FALL PLANTINGS STARTED AFTER SEPTEMBER 15.

PERMANENT:
1. USE WISCONSIN D.O.T. SEED MIX #40 AT 4 LB./1,000 S.F. IN LAWN AND TERRACES.
2. USE PRAIRIE NURSERY DETENTION BASIN WET PRAIRIE MIX IN DETENTION BASIN BELOW WATER ELEVATION.
3. USE PRAIRIE NURSERY EROSION CONTROL FOR DRY SOILS IN ALL OTHER AREAS AROUND THE DETENTION BASIN.

FERTILIZING RATES:

TEMPORARY AND PERMANENT:
USE WISCONSIN D.O.T. TYPE A OR B AT 7 LB./1,000 S.F.

MULCHING RATES:

TEMPORARY AND PERMANENT:
USE ½" TO 1-½" STRAW OR HAY MULCH, CRIMPED PER SECTION 607.3.2.3, OR OTHER RATE AND METHOD PER SECTION 627, WISCONSIN D.O.T. STANDARD SPECIFICATIONS FOR HIGHWAY AND STRUCTURE CONSTRUCTION

NATIVE PLANTINGS SHALL BE PER MANUFACTURERS RECOMMENDATIONS.

CONSTRUCTION SEQUENCE:

1. INSTALL INLET PROTECTION ON EXISTING INLETS ADJACENT TO PROPERTY.
2. INSTALL SILT FENCE, SILT SOCK, AND TRACKING PAD.
3. STRIP TOPSOIL OF EXISTING SITE
4. RELOCATE EXISTING SWALE, INFILTRATION TRENCH AND STORM SEWER TO THE NORTH AS PROPOSED.
5. ROUGH GRADE DRIVES, PARKING LOTS AND BUILDING PADS.
6. CONSTRUCT UNDERGROUND UTILITIES.
7. INSTALL INLET PROTECTION ON ALL NEW STORM INLETS.
8. CONSTRUCT WALKS, DRIVES, PARKING LOTS AND BUILDINGS.
9. FINAL GRADE SITE AND STABILIZE SITE.
10. GRADE / INSTALL INFILTRATION BASIN, BIORETENTION BASIN AND STONE FOR INFILTRATION TRENCHES.
11. FINAL GRADE SITE, RESPREAD TOPSOIL, SEED AND MULCH.
12. REMOVE TRACKING PAD AND SILT FENCE AFTER DISTURBED AREAS ARE STABILIZED.

vierbicher
planners | engineers | advisors
REEDSBURG - MADISON - PRAIRIE DU CHIEN
999 Fourier Drive, Suite 201 Madison, Wisconsin 53717
Phone: (608) 826-0532 Fax: (608) 826-0530

GRADING AND EROSION CONTROL PLAN

RIVA BUILDINGS 3, 4 AND 5
NO OAKS RIDGE
CITY OF FITCHBURG, DANE COUNTY, WISCONSIN

REVISIONS

NO.	DATE	REMARKS
1	7-18-13	BID PLANS
2	7-25-13	CITY COMMENTS

SCALE	AS SHOWN
DATE	6-11-13
DRAFTER	TCOY
CHECKED	JDOY
PROJECT NO.	130083
SHEET	4 OF 8
DWG. NO.	C-3.0

25 Jul 2013 - 12:11p M:\Avante Properties\130083_3rd Addtn to NS-Riva Bldg #3\Engineering\Civil 3D\Eng Base-130083.dwg by: jdoy

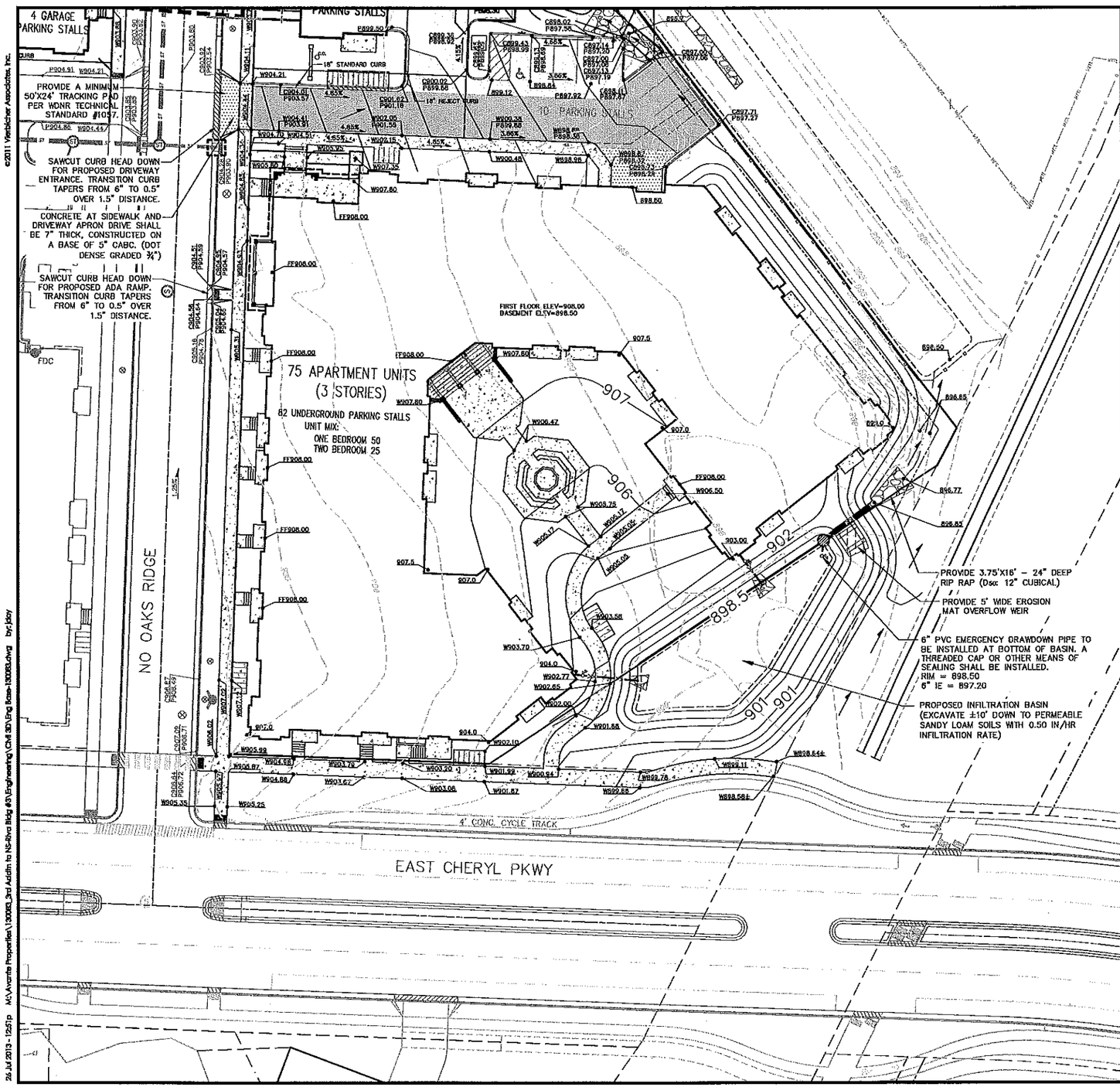

N
W E
S

GRAPHIC SCALE FEET
0 10 20 40

LEGEND

- PROPERTY BOUNDARY
- CURB AND GUTTER
- "DRIVEWAY" CURB AND GUTTER
- PROPOSED ADA DETECTABLE WARNING FIELD
- PROPOSED SIGN
- PROPOSED LIGHT POLE
- PROPOSED HANDICAP PARKING
- PROPOSED CONCRETE SIDEWALK
- PROPOSED HEAVY DUTY CONCRETE
- PROPOSED TYPICAL ASPHALT PAVEMENT
- PROPOSED HEAVY DUTY ASPHALT PAVEMENT
- STORM SEWER PIPE
- STORM SEWER MANHOLE
- STORM SEWER FIELD INLET
- STORM SEWER CURB INLET
- 820 EXISTING MAJOR CONTOURS
- 818 EXISTING MINOR CONTOURS
- 820 PROPOSED MAJOR CONTOURS
- 818 PROPOSED MINOR CONTOURS
- PROPOSED ADA ACCESSIBLE ROUTE
- SILT FENCE OR SILT SOCK
- 2.92% PROPOSED SLOPE ARROWS
- C906.55 PROPOSED SPOT ELEVATIONS
- 1048.61 EXISTING SPOT ELEVATIONS
- TYPE D INLET PROTECTION
- RIP RAP
- DITCH CENTERLINE

ABBREVIATIONS

C – TOP OF CURB
FF – FINISHED FLOOR
W – TOP OF WALK
P – EDGE OF PAVEMENT
R – RISERS

vierbicher
planners | engineers | advisors
JEFFERSON - MADISON - TRAVERSE CITY - GREEN
999 Fourier Drive, Suite 201 Madison, Wisconsin 53717
Phone: (608) 826-1200 Fax: (608) 826-1230

GRADING AND EROSION CONTROL PLAN

RIVA BUILDINGS 3, 4 AND 5
NO OAKS RIDGE
CITY OF FITCHBURG, DANE COUNTY, WISCONSIN

REVISIONS

NO.	DATE	REMARKS

REVISIONS

NO.	DATE	REMARKS
1	7-18-13	BID PLANS
2	7-25-13	CITY COMMENTS

SCALE: AS SHOWN
DATE: 6-11-13
DRAFTER: TCOY
CHECKED: JDOY
PROJECT NO.: 130083
SHEET: 5 OF 8
DWG. NO.: C-3.1

©2011 Vierbicher Associates, Inc.

26 Jul 2013 - 12:57p M:\Avante Properties\130083_3rd Addtn to NO-Riva Bldg #3\Engineering\Civil 3D\Eng Base-130083.dwg by: jdoy

©2011 Vierbicher Associates, Inc.

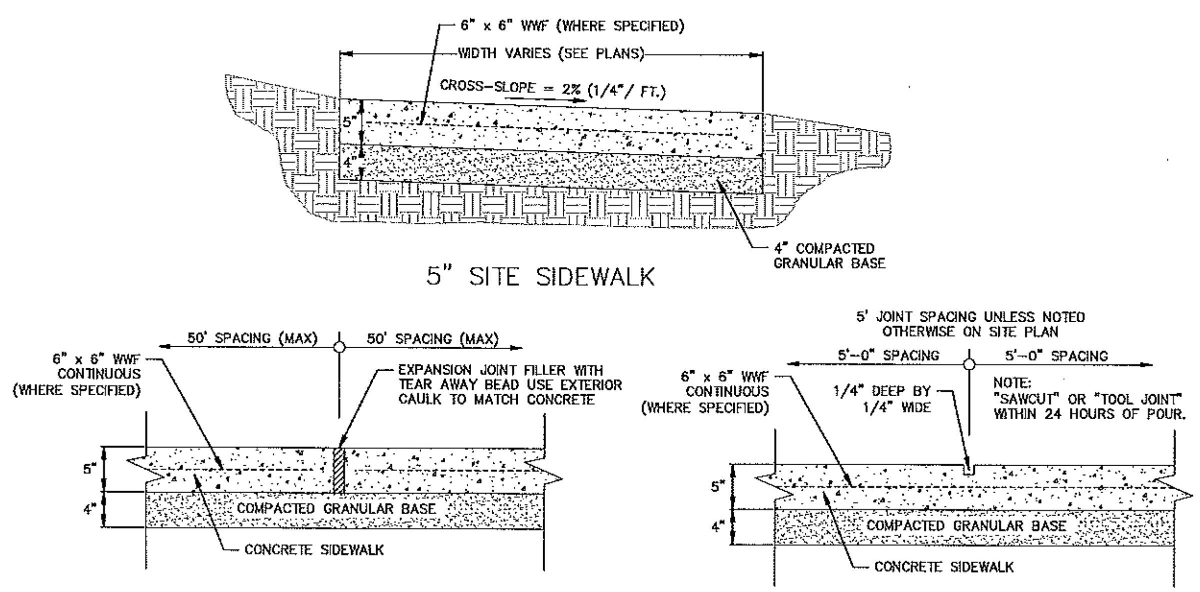

1/6 5" SIDEWALK
NOT TO SCALE

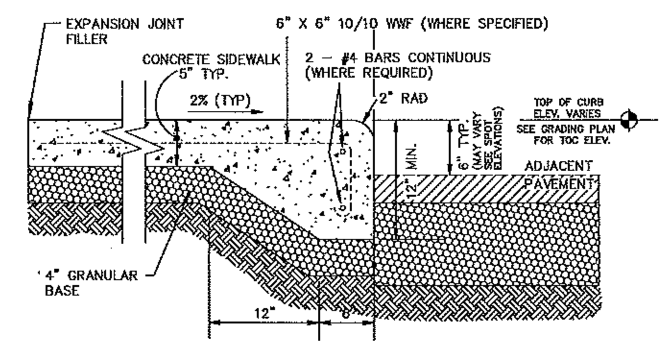

6/6 6" RAISED WALK DETAIL
NOT TO SCALE

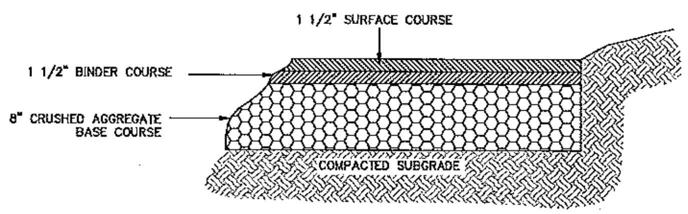

2/6 SITE TYPICAL ASPHALT SECTION
NOT TO SCALE

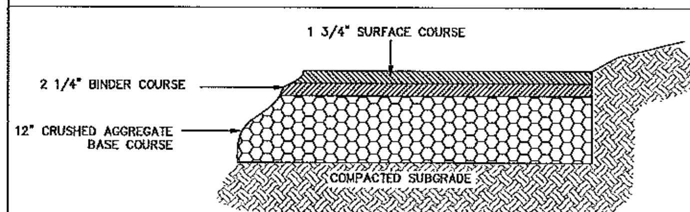

3/6 SITE HEAVY DUTY ASPHALT SECTION
NOT TO SCALE

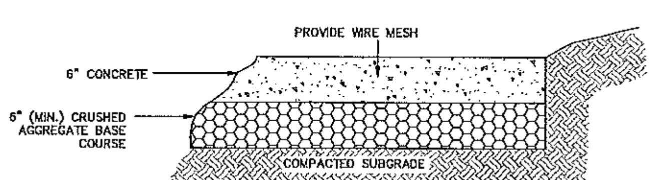

4/6 SITE HEAVY DUTY CONCRETE SECTION
NOT TO SCALE

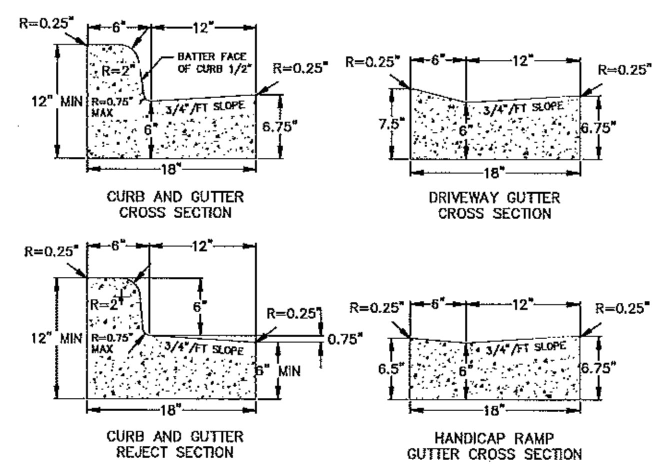

NOTES:
1. ALL CURB AND GUTTER SHALL HAVE MIN. 6" BASE OF COMPACTED CRUSHED AGGREGATE, GRADATION NO. 2 OR 3 (TYP.)
2. 6" BASE SHALL BE PROVIDED 12" BEYOND BACK OF CURB.
3. ALL CURB AND GUTTER SHALL ALSO COMPLY WITH CITY OF FITCHBURG STANDARD DETAIL 4.01.
4. "TIE BARS" ARE TO BE USED WITH CURB SECTION AND CURB AND GUTTER SECTION.
5. IN ALL CASES, CONCRETE CURB AND GUTTER SHALL BE PLACED ON THOROUGHLY COMPACTED CRUSHED STONE.
6. THE TOP OF CURB SHALL BE MARKED WHERE THE SANITARY SEWER AND WATER SERVICE CROSS THE CURB AND GUTTER. THE MARK MAY BE MADE BY SAWCUTTING, TOOLING, OR STAMPING. THE DEPTH SHALL BE A MINIMUM 1/16" DEEP.

5/6 18" CURB AND GUTTER DETAIL
NOT TO SCALE

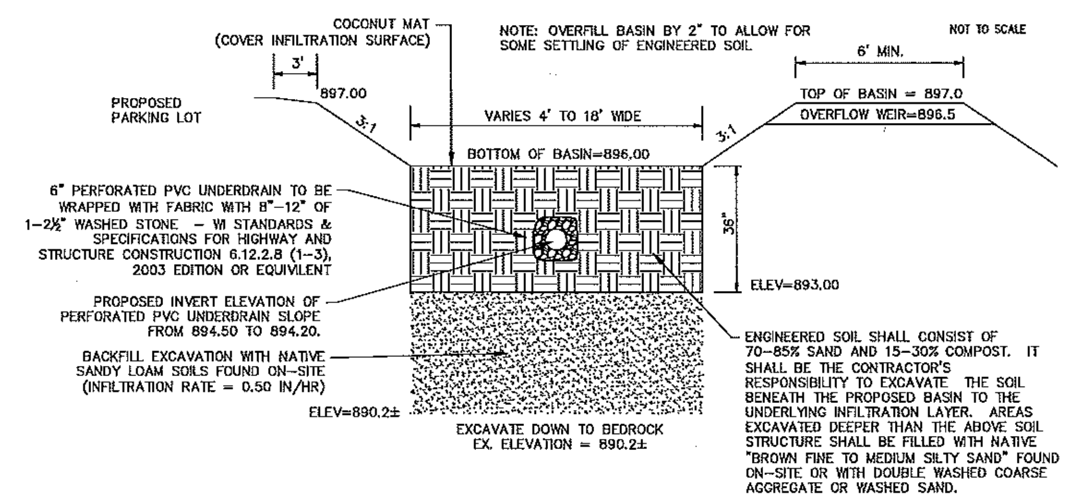

BIO-RETENTION AREA RESTORATION SPECIFICATIONS:
NOTE: BIO-RETENTION AREA MUST NOT BE CONSTRUCTED (INSTALLED) UNTIL THE SITE IS STABILIZED, I.E. THE GRASS COVER IS WELL ESTABLISHED.

BIO-RETENTION AREA MUST CONFORM TO WISCONSIN DNR TECHNICAL STANDARD 1004 (BIORETENTION FOR INFILTRATION)

PLANTING, MULCH, AND MAINTENANCE NOTES:
PLANTING SHOULD TAKE PLACE BETWEEN AVAILABILITY OF PLANTS IN SPRING AND JUNE 30TH, OR BETWEEN SEPTEMBER 1ST AND OCTOBER 15TH. IF PLANTED JULY 1ST THROUGH AUGUST 31ST, HEAVILY WATER THE PLANTS AT THE TIME THEY ARE PLANTED, AND EVERY OTHER DAY FOR A TOTAL OF 4 WATERINGS. A RAIN EVENT GREATER THAN 0.5 INCHES CONSTITUTES A WATERING. IF PLANTED SEPTEMBER 1ST THROUGH OCTOBER 15TH, PLACE CERTIFIED WEED-FREE STRAW MULCH AT 3" MINIMUM THICKNESS BETWEEN PLANTS TO HELP PREVENT FROST HEAVE. IF PLANTING IS TO OCCUR AFTER OCTOBER 15TH, IT MUST BE POSTPONED UNTIL THE FOLLOWING SPRING (MAY). FOR THE FIRST 3 YEARS AFTER PLANTING, SPOT TREAT THE AREA WITH HERBICIDE TO REMOVE WEEDS.

RESTORATION OF THE INFILTRATION AREA (NOT INCLUDING SIDE SLOPES):
1. OVER-EXCAVATE THE AREA TO INFILTRATIVE LAYER TO BE DETERMINED IN THE FIELD, DURING EXCAVATION.
2. CHISEL PLOW, OR ROTO-TILL THE BASE OF THE AREA TO BREAK UP ANY HARDPAN IN THE NATIVE SOIL LAYER.
3. PLACE WASHED MATERIAL (FREE OF P200 PARTICLES)
4. PLACE 36 INCHES OF ENGINEERED SOIL.
5. PLANT PLUG, EROSION MAT, WATER, AND MAINTAIN AS DIRECTED ABOVE.

7/6 BIORETENTION BASIN TYPICAL SECTION
NOT TO SCALE

vierbicher
planners | engineers | advisors
REEDSBURG - MADISON - PRAIRIE DU CHIEN
999 Fourier Drive, Suite 201 Madison, Wisconsin 53717
Phone: (608) 826-0532 Fax: (608) 826-0530

CONSTRUCTION DETAILS
RIVA BUILDINGS 3, 4 AND 5
NO OAKS RIDGE
CITY OF FITCHBURG, DANE COUNTY, WISCONSIN

REVISIONS

NO.	DATE	REMARKS
1	7-18-13	BID PLANS
2	7-25-13	CITY COMMENTS

REVISIONS

NO.	DATE	REMARKS

SCALE: AS SHOWN
DATE: 6-11-13
DRAFTER: TCOY
CHECKED: JDOY
PROJECT NO. 130083
SHEET 6 OF 8
DWG. NO. C-4.0

25 Jul 2013 - 10:24a M:\Avante Properties\130083_3rd Addtn to NI-Riva Bldg #3\Engineering\Civil 3D\Eng Base-130083.dwg by: jdoy

©2011 Vierbicher Associates, Inc.

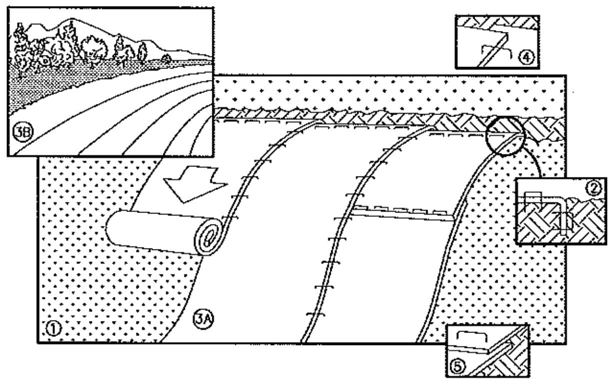

NOTE: REFER TO GENERAL STAPLE PATTERN GUIDE FOR CORRECT STAPLE PATTERN RECOMMENDATIONS FOR SLOPE INSTALLATIONS.

1. PREPARE SOIL BEFORE INSTALLING BLANKETS, INCLUDING APPLICATION OF FERTILIZER AND SEED.
   NOTE: WHEN USING CELL-O-SEED, DO NOT SEED PREPARED AREA. CELL-O-SEED MUST BE INSTALLED WITH PAPER SIDE DOWN.
2. BEGIN AT THE TOP OF THE SLOPE BY ANCHORING THE BLANKET IN 6" DEEP BY 6" WIDE TRENCH. BACKFILL AND COMPACT THE TRENCH AFTER STAPLING.
3. ROLL THE BLANKETS <A.> DOWN, OR <B.> HORIZONTALLY ACROSS THE SLOPE.
4. THE EDGES OF PARALLEL BLANKETS MUST BE STAPLED WITH APPROXIMATELY 2" OVERLAP.
5. WHEN BLANKETS MUST BE SPLICED DOWN THE SLOPE, PLACE BLANKETS END OVER END (SHINGLE STYLE) WITH APPROXIMATELY 4" OVERLAP. STAPLE THROUGH OVERLAPPED AREA, APPROXIMATELY 12" APART.
6. ALL BLANKETS MUST BE SECURELY FASTENED TO THE SLOPE BY PLACING STAPLES/STAKES IN APPROPRIATE LOCATIONS AS RECOMMENDED BY THE MANUFACTURER.

1/7 EROSION MAT
NOT TO SCALE

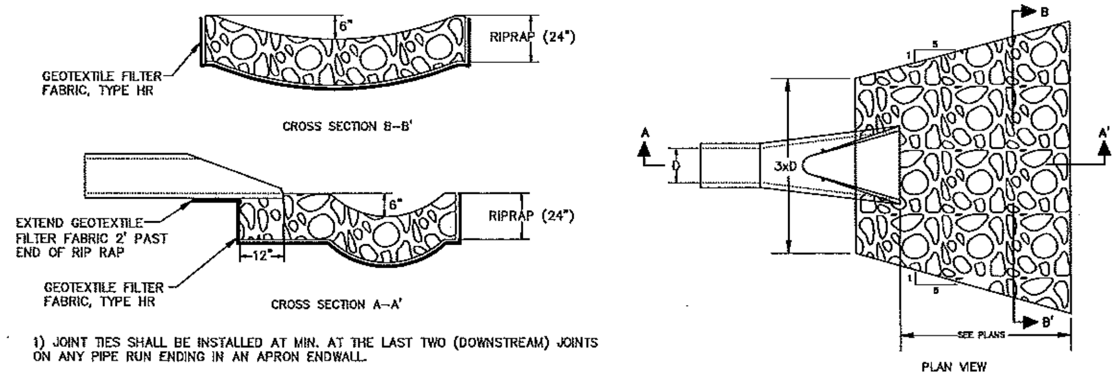

1) JOINT TIES SHALL BE INSTALLED AT MIN. AT THE LAST TWO (DOWNSTREAM) JOINTS ON ANY PIPE RUN ENDING IN AN APRON ENDWALL.

3/7 RIP RAP OUTLET DETAIL
NOT TO SCALE

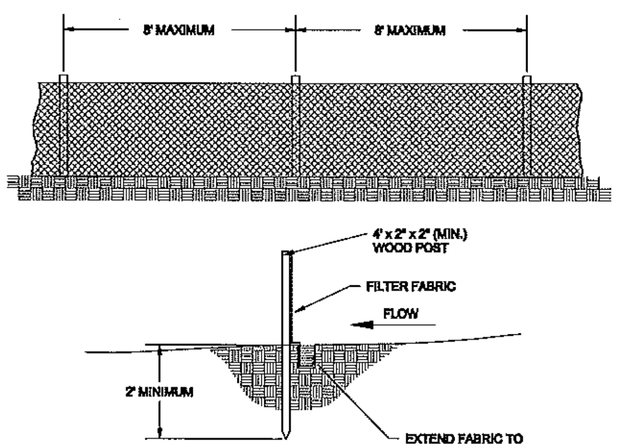

1. DRIVE STAKES INTO THE GROUND AT LEAST 24" DEEP. STAKE SPACING TO BE PER MANUFACTURERS RECOMMENDATIONS BUT IN NO CASE, MORE THAN 8' BETWEEN STAKES.
2. EXCAVATE A 4" x 6" DEEP TRENCH UPSLOPE ALONG THE LINE OF STAKES.
3. STAPLE FILTER MATERIAL ON UPSLOPE SIDE OF STAKES AND EXTEND IT INTO THE TRENCH. WHEN JOINTS ARE NECESSARY, OVERLAP MATERIAL BETWEEN TWO STAKES AND FASTEN SECURELY.
4. BACKFILL AND COMPACT THE EXCAVATED SOIL.

2/7 SILT FENCE DETAIL
NOT TO SCALE

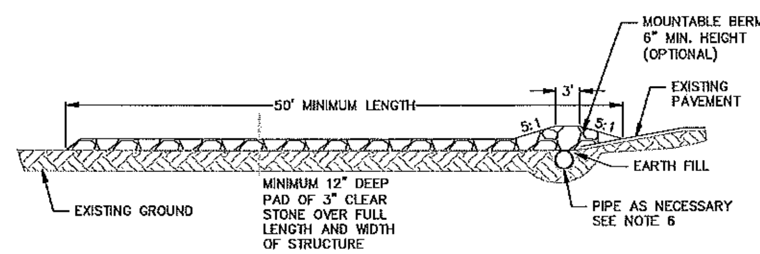

PROFILE VIEW

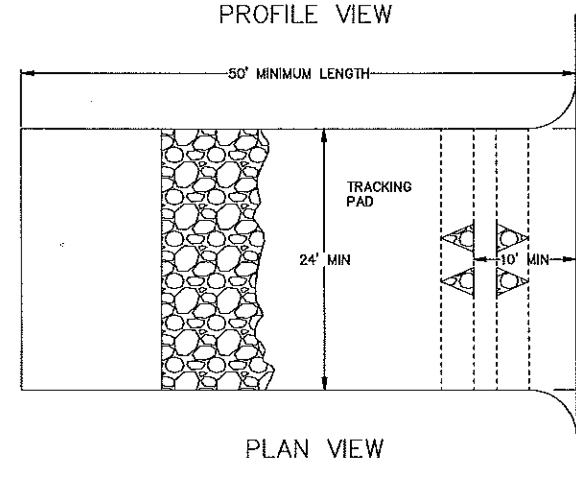

PLAN VIEW

1. FOLLOW WISCONSIN DNR TECHNICAL STANDARD 1057 FOR FURTHER DETAILS AND INSTALLATION.
2. LENGTH – MINIMUM OF 50'.
3. WIDTH – 24' MINIMUM, SHOULD BE FLARED AT THE EXISTING ROAD TO PROVIDE A TURNING RADIUS.
4. ON SITES WITH A HIGH GROUNDWATER TABLE OR WHERE SATURATED CONDITIONS EXIST, GEOTEXTILE FABRIC SHALL BE PLACED OVER EXISTING GROUND PRIOR TO PLACING STONE. FABRIC SHALL BE WISDOT TYPE-HR GEOTEXTILE FABRIC.
5. STONE – CRUSHED 3" CLEAR STONE SHALL BE PLACED AT LEAST 12" DEEP OVER THE ENTIRE LENGTH AND WIDTH OF ENTRANCE.
6. SURFACE WATER – ALL SURFACE WATER FLOWING TO OR DIVERTED TOWARDS CONSTRUCTION ENTRANCES SHALL BE PIPED THROUGH THE ENTRANCE, MAINTAINING POSITIVE DRAINAGE. PIPE INSTALLED THROUGH THE STABILIZED CONSTRUCTION ENTRANCE SHALL BE PROTECTED WITH A MOUNTABLE BERM WITH 5:1 SLOPES AND MINIMUM OF 6" STONE OVER THE PIPE. PIPE SHALL BE SIZED ACCORDING TO THE DRAINAGE REQUIREMENTS. WHEN THE ENTRANCE IS LOCATED AT A HIGH SPOT AND HAS NO DRAINAGE TO CONVEY A PIPE SHALL NOT BE NECESSARY. THE MINIMUM PIPE DIAMETER SHALL BE 6". CONTRACTOR SHALL BE RESPONSIBLE FOR THE MAINTENANCE OF SAID PIPE.
7. LOCATION – A STABILIZED CONSTRUCTION ENTRANCE SHALL BE LOCATED WHERE CONSTRUCTION TRAFFIC ENTERS AND/OR LEAVES THE CONSTRUCTION SITE. VEHICLES LEAVING THE SITE MUST TRAVEL OVER THE ENTIRE LENGTH OF THE TRACKING PAD.

4/7 STONE CONSTRUCTION ENTRANCE
NOT TO SCALE

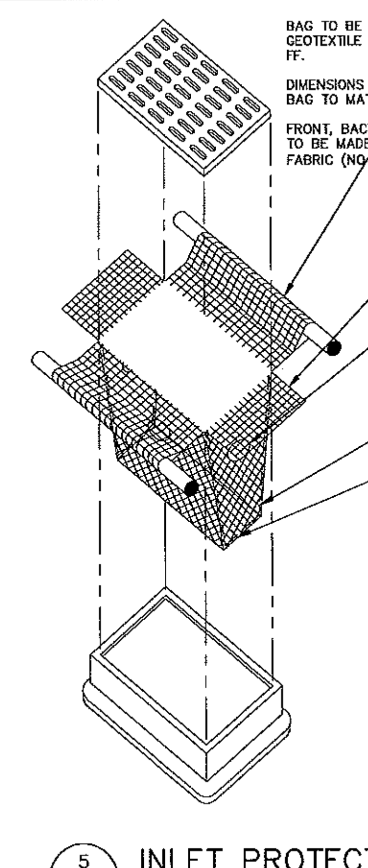

BAG TO BE CONSTRUCTED USING GEOTEXTILE FABRIC, WisDOT TYPE FF.

DIMENSIONS OF TOP OPENING OF BAG TO MATCH INLET GRATE.

FRONT, BACK AND BOTTOM PANEL TO BE MADE FROM SINGLE PIECE OF FABRIC (NO SEAMS).

FLAP POCKETS TO BE FITTED WITH REBAR OR STEEL ROD FOR REMOVAL. IF USED WITH CURB BOX, FLAP POCKETS TO BE FITTED WITH WOOD 2" x 4", EXTENDED 10" BEYOND GRATE WIDTH AND SECURED TO GRATE WITH TIES. THE WOOD SHALL NOT BLOCK THE ENTIRE HEIGHT OF THE CURB BOX OPENING.

TRIM EXCESS FABRIC IN THE FLOW LINE TO WITHIN 3" OF THE GRATE.

4" x 6" OVAL HOLE CUT INTO ALL FOUR SIDE PANELS. HOLES TO BE POSITIONED MIN. 6" BELOW INLET GRATE AND MIN. 12" ABOVE BOTTOM PANEL.

DOUBLE STITCHED SEAMS AROUND SIDE PANELS AND AT FLAP POCKETS.

BOTTOM DIMENSION = 12"

INSTALLED BAG SHALL HAVE A MIN. SIDE CLEARANCE OF 3" FROM THE INLET WALLS, MEASURED AT THE HOLES. IF NECESSARY, CONTRACTOR SHALL CINCH THE BAG (MAX. 4" FROM BAG BOTTOM) TO ACHIEVE CLEARANCE.

INLET PROTECTION DEVICES SHALL BE MAINTAINED OR REPLACED AT THE DIRECTION OF THE ENGINEER.

WHEN REMOVING OR MAINTAINING INLET PROTECTION, ANY TRAPPED MATERIAL THAT FALLS INTO THE INLET SHALL BE IMMEDIATELY REMOVED BY THE CONTRACTOR.

IF INLET DEPTH FROM TOP OF GRATE TO BOTTOM OF INLET IS LESS THAN 30", CONTRACTOR SHALL SUBSTITUTE WisDOT TYPE C INLET PROTECTION.

5/7 INLET PROTECTION TYPE D
NOT TO SCALE

vierbicher
planners | engineers | advisors
REEDSBURG - MADISON - PRAIRIE DU CHIEN
999 Fourier Drive, Suite 201 Madison, Wisconsin 53717
Phone: (608) 826-0532 Fax: (608) 826-0530

CONSTRUCTION DETAILS
RIVA BUILDINGS 3, 4 AND 5
NO OAKS RIDGE
CITY OF FITCHBURG, DANE COUNTY, WISCONSIN

REVISIONS

NO.	DATE	REMARKS
1	7-18-13	BID PLANS
2	7-25-13	CITY COMMENTS

SCALE: AS SHOWN
DATE: 6-11-13
DRAFTER: TCOY
CHECKED: JDOY
PROJECT NO.: 130083
SHEET: 7 OF 8
DWG. NO.: C-4.1

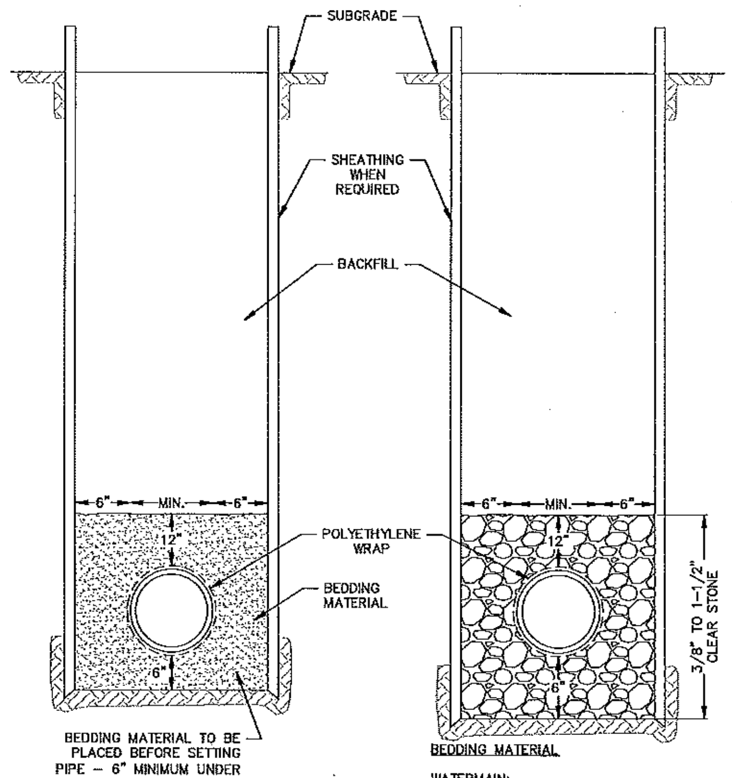

BEDDING MATERIAL

WATERMAIN:
3/8" TO 1/2" CRUSHED STONE, OR SAND

SANITARY SEWER:
3/8" TO 1-1/2" CLEAR STONE

STORM SEWER:
3/4" TO 1-1/2" CRUSHED STONE

DRY TRENCH CONDITION — WET OR UNSTABLE CONDITION

1/8 STANDARD TRENCH SECTION
NOT TO SCALE

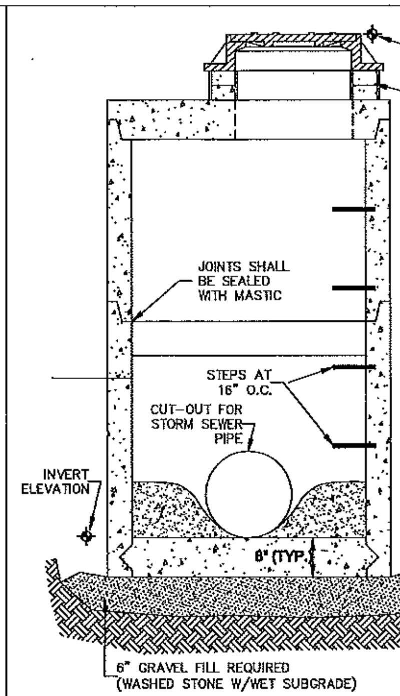

CASTING SHALL BE 1/4" BELOW FINISHED PAVEMENT OR AS ESTABLISHED BY THE ENGINEER

ADJUSTING RINGS

MANHOLE CASTING SHALL BE HEAVY DUTY, NEENAH FOUNDRY CO. CATALOG LISTING NO. R-1550, WITH TYPE "B" NON-ROCKING LID, GASKET SEAL AND CONCEALED PICKHOLES

CONCRETE SHALL BE 4000 PSI, 28 DAY COMPRESSIVE STRENGTH, 6.5 BAG MIX WITH 1~2% AIR ENTRAINMENT.

MANHOLE STEPS SHALL CONFORM TO ASTM-C478 & SHALL BE NEENAH FOUNDRY CO. R-1981-N OR APPROVED EQUAL. STEPS SHALL BE SPACED 16" ON CENTER.

ADJUST FRAME WITH A MINIMUM OF 3 INCHES AND MAXIMUM OF 9 INCHES OF LADTECH HDPE ADJUSTING RINGS OR APPROVED EQUAL.

2x3 OPENING IS REQUIRED FOR STORM INLET MANHOLES WITH CASTING AND RINGS AS SPECIFIED IN DETAIL 02721-A.

STORM MANHOLE DIMENSIONS

MANHOLE SIZE	DIMENSION A	DIMENSION B (MIN.)
48"	48"	5"
60"	60"	6"
72"	72"	7"
84"	84"	7"
96"	96"	9"

2/8 STORM SEWER MANHOLE DETAIL
NOT TO SCALE

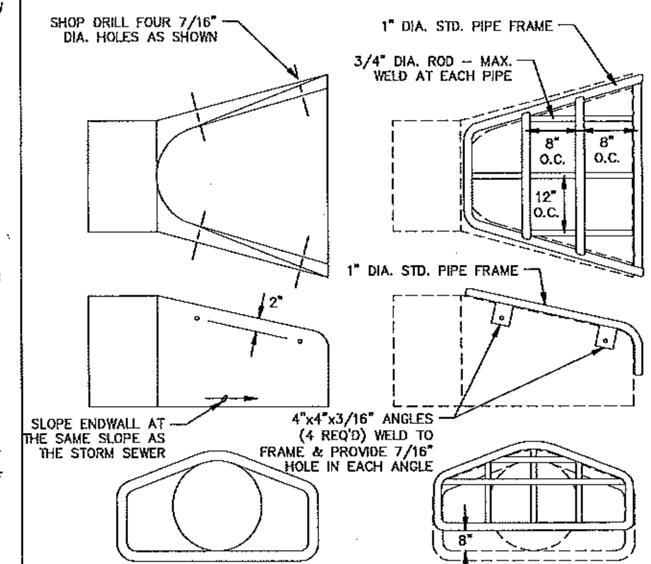

ENDWALL DETAILS — PIPE GATE DETAILS

NOTES:
– THE CONTRACTOR SHALL BOLT THE PIPE GATE TO THE CONCRETE ENDWALL WITH FOUR 3/8"x6" MACHINE BOLTS WITH NUTS ON INSIDE WALL.

PAINTING SPECIFICATIONS:
– THE PIPE GATE SHALL RECEIVER THE FOLLOWING PREPARATION & PAINTING. THE FIRST COAT SHALL BE RUS-OLEUM X-60 RED BARE METAL PRIMER OR APPROVED EQUAL. THE SECOND COAT SHALL BE RUST-OLEUM 960 ZINC CHROMATE PRIMER OR APPROVED EQUAL. THE THIRD COAT SHALL BE RUS-OLEUM 1282 HIGH GLOSS METAL FINISH OR APPROVED EQUAL.

PREPARATION STEPS:
1. BARE METAL SURFACES – TREAT WITH THE THREE-COAT PAINTING SYSTEM LISTED AFTER A THOROUGH SCRAPING, WIRE BRUSHING & CLEANING.
2. EACH COAT OF PAINT SHALL BE APPLIED OVER THE ENTIRE GATE SURFACE.
3. ALLOW 24-48 HOURS DRYING TIME AT 60° OR ABOVE BETWEEN COATS.

3/8 STANDARD ENDWALL
NOT TO SCALE

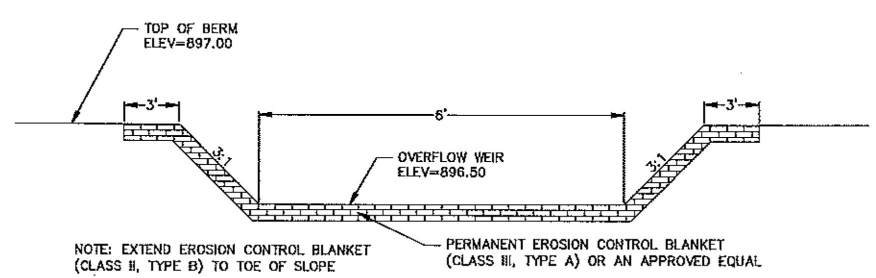

NOTE: EXTEND EROSION CONTROL BLANKET (CLASS II, TYPE B) TO TOE OF SLOPE

4/8 OVERFLOW WEIR AT BIORETENTION BASIN
NOT TO SCALE

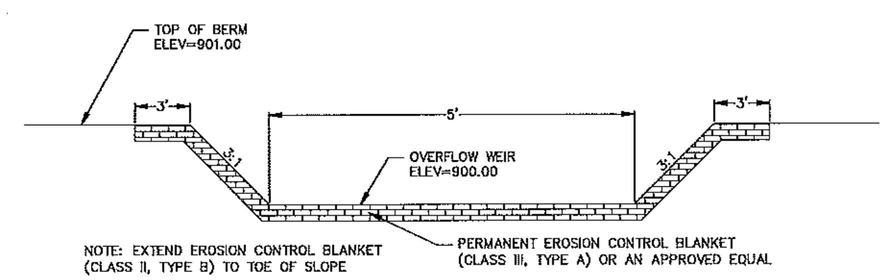

NOTE: EXTEND EROSION CONTROL BLANKET (CLASS II, TYPE B) TO TOE OF SLOPE

5/8 OVERFLOW WEIR AT INFILTRATION BASIN
NOT TO SCALE

vierbicher
planners | engineers | advisors

CONSTRUCTION DETAILS
RIVA BUILDINGS 3, 4 AND 5
NO OAKS RIDGE
CITY OF FITCHBURG, DANE COUNTY, WISCONSIN

REVISIONS

NO.	DATE	REMARKS
1	7-18-13	BID PLANS
2	7-25-13	CITY COMMENTS

SCALE: AS SHOWN
DATE: 6-11-13
DRAFTER: TCOY
CHECKED: JDOY
PROJECT NO.: 130083
SHEET: 8 OF 8
DWG. NO.: C-4.2

©2011 Vierbicher Associates, Inc.

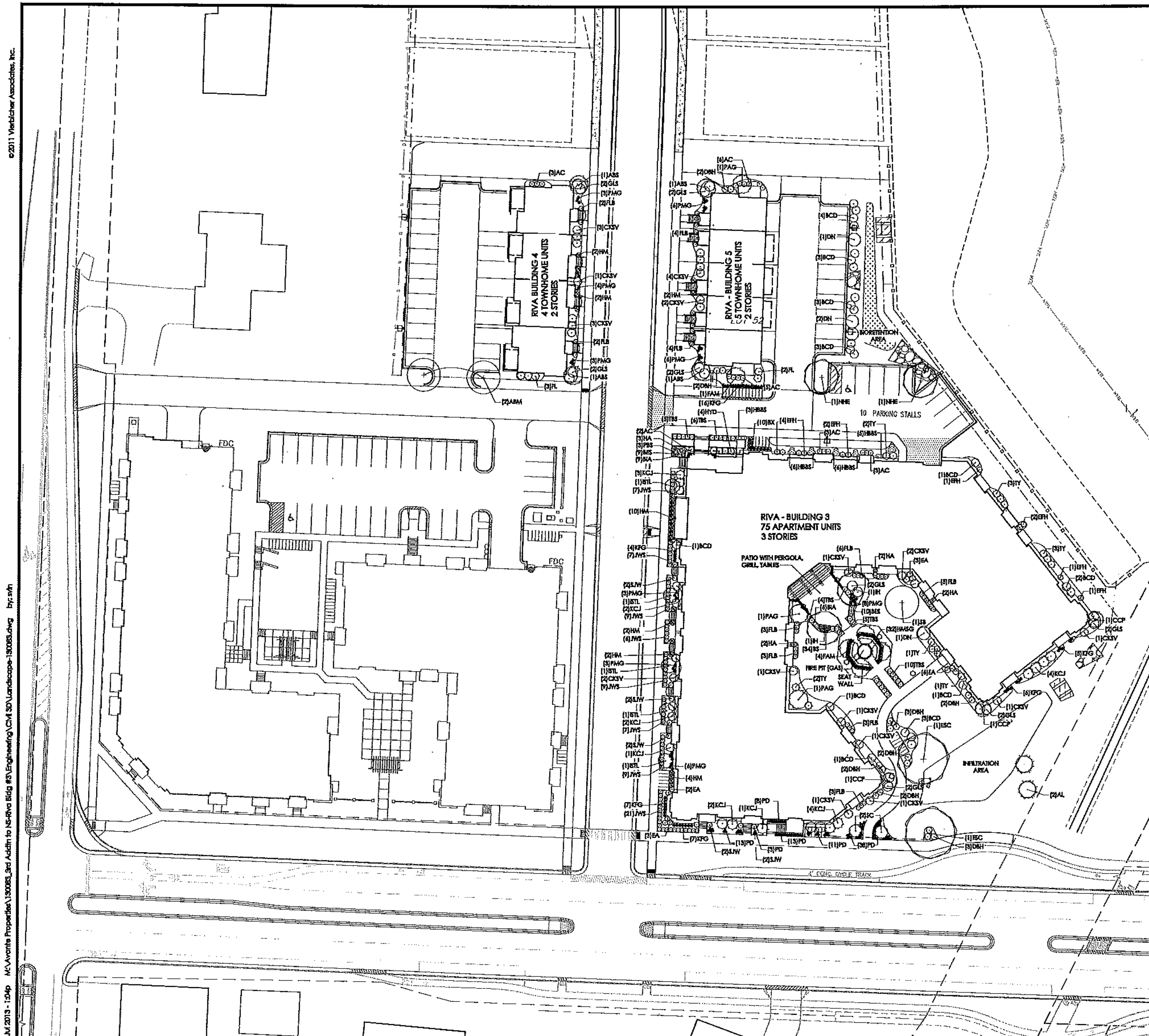

key	qty.	botanical name	common name	planting size	root cond.	mature size
			Master Plant List			
			shade trees			
ABM	2	*Acer x freemanii 'Jeffersred'*	Autumn Blaze Maple	2" cal.	B&B	45' x 40'
BIC	2	*Phellodendron lavallei 'Longnecker'*	Eye Stopper Corktree	2.5" cal.	B&B	45' x 50'
IH	2	*Gleditsia triacanthos 'Impcole'*	Imperial Honeylocust	2" cal.	B&B	30' x 30'
NHE	2	*Ulmus x 'New Horizon'*	New Horizon Elm	2.5" cal.	B&B	55' x 45'
SB	1	*Aesculus glabra 'JN Select'*	Sunset Buckeye	2" cal.	B&B	35' x 30'
			coniferous trees			
AL	2	*Larix laricina*	American Larch	8' ht.	B&B	40' x 12'
			ornamental trees			
ABS	4	*Amelanchier x grandiflora 'Autumn Brilliance'*	Autumn Brilliance Serviceberry	6' ht.	B&B	20' x 20'
CCP	3	*Pyrus calleryana 'Chanticleer'*	Chanticleer Callery Pear	2" cal.	B&B	30' x 15'
FAM	5	*Acer ginnala 'Flame'*	Flame Amur Maple	6' ht.	B&B	20' x 20'
ISTL	5	*Syringa reticulata 'Ivory Silk'*	Ivory Silk Tree Lilac	2" cal.	B&B	20' x 10'
PAG	3	*Cornus alternifolia*	Pagoda Dogwood	4' ht.	B&B	20' x 20'
SC	2	*Malus sargentii*	Sargent Crabapple	2" cal.	B&B	8' x 12'
			deciduous shrubs			
AC	22	*Ribes alpinum 'Green Mound'*	Green Mound Alpine Currant	#5	cont.	4' x 4'
BCD	23	*Cornus sericea 'Gary'*	Bergeson Compact Dogwood	#5	cont.	5' x 5'
CKSV	28	*Viburnum carlesii 'Compactum'*	Compact Koreanspice Viburnum	#5	cont.	4' x 6'
DBH	15	*Diervilla lonicera*	Dwarf Bush Honeysuckle	#5	cont.	3' x 4'
DN	4	*Physocarpus opulifolius 'Monlo'*	Diablo Ninebark	#5	cont.	8' x 8'
FL	5	*Syringa laciniata*	Fernleaf Lilac	#5	cont.	5' x 5'
FLB	35	*Rhamnus frangula 'Ron Williams'*	Fine Line Buckthorn	#5	cont.	
GLS	16	*Rhus aromatica 'Gro Low'*	Gro-Low Fragrant Sumac	#3	cont.	30" x 6'
HYD	4	*Hydrangea arborescens 'Grandiflora'*	Snowhill Hydrangea	#3	cont.	4' x 4'
JWS	75	*Spiraea albiflora*	Japanese White Spirea	#3	cont.	30" x 30"
SJW	10	*Hypericum kalmianum*	St John's Wort	#3	cont.	3' x 3'
TBS	30	*Spiraea betulifolia 'Tor'*	Tor Birchleaf Spirea	#3	cont.	30" x 3'
			evergreen shrubs			
BX	10	*Buxus x 'Green Mound'*	Green Mound Boxwood	18" ht.	cont.	3' x 3'
EA	15	*Thuja occidentalis 'Smaragd'*	Emerald Arborvitae	4' ht.	B&B	20' x 4'
EFH	11	*Tsuga canadensis 'Monler'*	Emerald Fountain Hemlock	4' ht.	B&B	8' x 3'
HA	9	*Thuja occidentalis 'Holmstrup'*	Holmstrup Arborvitae	4' ht.	cont.	14' x 3'
HM	22	*Thuja occidentalis 'Hetz Midget'*	Hetz Midget Arborvitae	18" ht.	cont.	3' x 3'
KCJ	19	*Juniperus chinensis 'Pfitzeriana Kallay'*	Kallay's Compact Juniper	12" ht.	cont.	3' x 6'
TY	12	*Taxus x media 'Tauntonii'*	Taunton Yew	18" ht.	B&B	3-5' x 6-10'
			perennials			
BIA	15	*Amsonia 'Blue Ice'*	Blue Ice Amsonia	#1	cont.	18" x 20"
BES	19	*Rudbeckia speciosa 'Viette's Little Suzy'*	Viette's Little Suzy Black Eyed Susan	#1	cont.	15" x 15"
BS	54	*Waldsteinia ternata*	Barren Strawberry	#1	cont.	6" x 12"
HBBS	20	*Cimicifuga racemosa 'Hillside Black Beauty'*	Hillside Black Beauty Snakeroot	#1	cont.	5' x 30"
HMSG	32	*Panicum virgatum 'Heavy Metal'*	Heavy Metal Switch Grass	#1	cont.	3' x 2'
KFG	45	*Calamagrostis acutiflora 'Karl Foerster'*	Karl Foerster Feather Reed Grass	#1	cont.	4' x 2'
PBS	5	*Liatris pycnostachya*	Prairie Blazing Star	#1	cont.	36" x 18"
PD	84	*Sporobolus heterolepis*	Prairie Dropseed	#1	cont.	24" x 18"
PMG	42	*Miscanthus sinensis var. purpurascens*	Purple Maiden Grass	#1	cont.	60" x 24"

GENERAL NOTES:

1. All plantings shall conform to quality requirements as per ANSI Z60.1.
2. All plant material shall be true to the species, variety and size specified, nursery grown in accordance with good horticultural practices, and under climactic conditions similar to those of the project site.
3. Contact Landscape Architect, in writing, to request and plant material substitutions due to availability issues.
4. Areas labeled 'BIORETENTION' to be planted with native plant plugs at 15" on center (550 plants total), plant list to be developed.
5. Areas labeled 'INFILTRATION' to be seeded with Infiltration Swale seed mix by Agrecol, or equal, at 9 lbs per acre.
6. All disturbed areas, unless otherwise noted, to be seeded with Madison Parks Mix by Olds Seed Company or equivalent, per manufacturer's specified application rates. All seeded areas are to be watered daily to maintain adequate soil moisture for proper germination. After vigorous growth is established, apply ½" water twice weekly until final acceptance.
7. All plants shall be guaranteed to be in healthy and flourishing condition during the growing season following installation. All plant material shall be guaranteed for one year from the time of installation.
8. Contractor shall provide a suitable amended topsoil blend for all planting areas where soil conditions are unsuitable for plant growth. Topsoil shall conform to quality requirements as per Section 625.2(1) of the Standard Specifications for Highway Construction. Provide a minimum of 12" of topsoil in all planting areas and 6" of topsoil in areas to be seeded/sodded.
9. Landscape beds to be mulched with undyed shredded hardwood bark mulch to 3" depth min.
10. Stone mowing edge to be provided around all buildings, 24" width typ. Stone to be 1.5" clean crushed stone, dark gray in color, to 3" depth min. over weed barrier fabric.
11. All landscape beds to be edged with black vinyl landscape edging, Black Diamond brand or equal.

GRAPHIC SCALE FEET
0 15 30 60

vierbicher
planners | engineers | advisors
REEDSBURG - MADISON - PRAIRIE DU CHIEN
999 Fourier Drive, Suite 201 Madison, Wisconsin 53717
Phone: (608) 826-0532 Fax: (608) 826-0530

LANDSCAPE PLAN

RIVA BUILDINGS 3, 4 AND 5
NO OAKS RIDGE
CITY OF FITCHBURG, DANE COUNTY, WISCONSIN

REVISIONS		
NO.	DATE	REMARKS
1	07/18/13	BID PLANS
2	07/25/13	CITY COMMENTS

SCALE: AS SHOWN
DATE: 6-11-13
DRAFTER: SVN
CHECKED:
PROJECT NO. 130083
SHEET 1 OF 8
DWG. NO. L-1.0

©2011 Vierbicher Associates, Inc.

26 Jul 2013 - 1:04p M:\Avante Properties\130083_3rd Addtn to NS-Riva Bldg #3\Engineering\Civil 3D\Landscape-130083.dwg by: svn

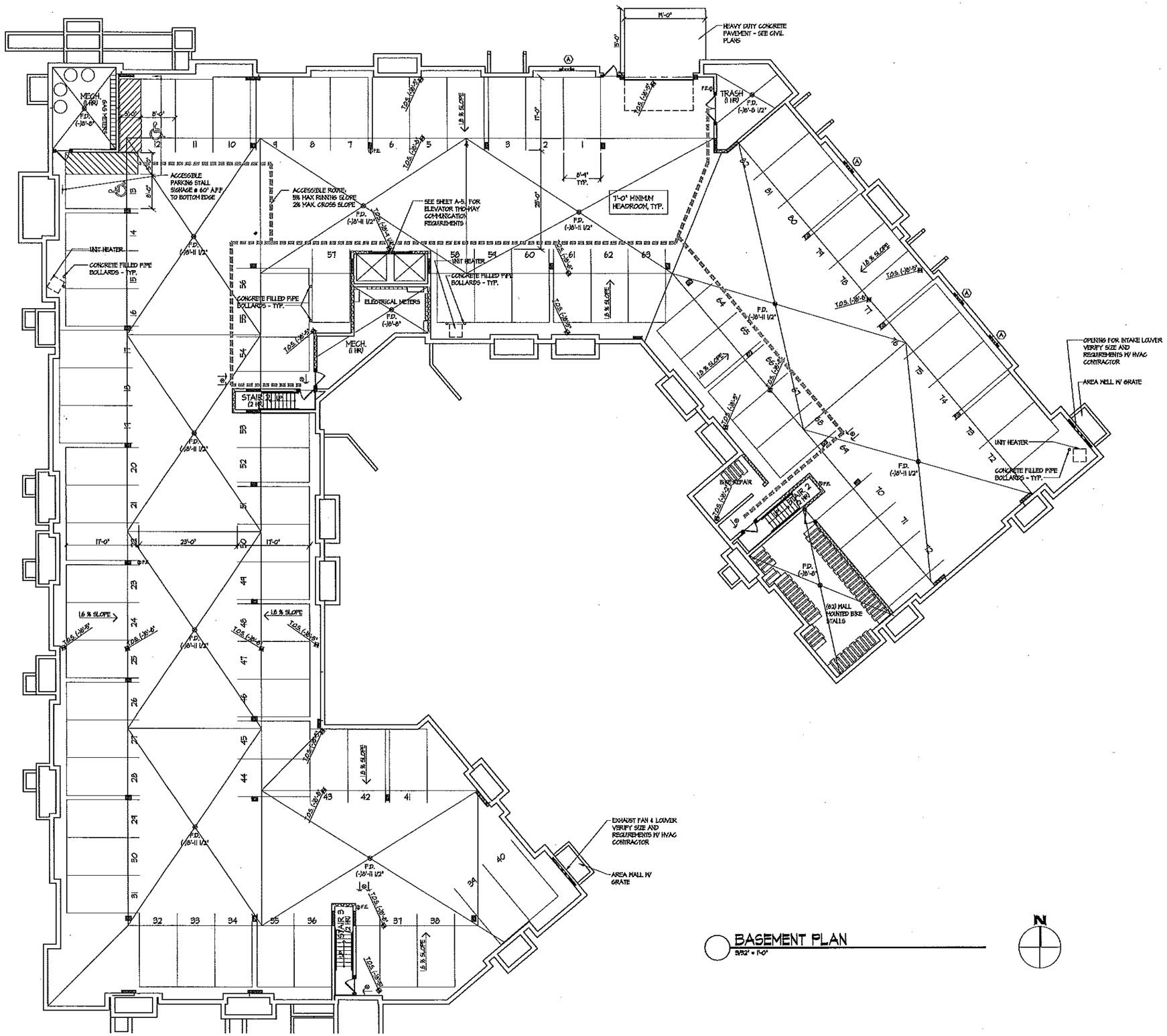

BASEMENT PLAN

3/32" = 1'-0"

KNOTHE & BRUCE ARCHITECTS

7601 University Avenue Suite 201
Middleton, Wisconsin 53562
608-836-3690 Fax 836-6934

Consultant

Notes

1. SEE 15 / A-3.1 FOR TYPICAL BREAKFAST BAR DETAIL
2. ALL PARTITIONS TO BE TYPE I UNLESS NOTED OTHERWISE - SEE SHEET A-0.10
3. SEE FRAMING PLANS FOR BEARING WALL LOCATIONS. BEARING WALLS TO BE WALL TYPE #4. WALLS CONTAINING BEARING COLUMNS TO ALSO BE TYPE #4.
4. SEE SHEETS A-5.1 AND A-5.2 FOR ACCESSIBILITY REQUIREMENTS FOR TYPE A AND TYPE B UNITS

Revisions
June 26, 2013
Revised City - July 25, 2013
Revised City - August 29, 2013

1 City-July 25, 2013

Project Title
RIVA PHASE II
BUILDING 3

Drawing Title
Basement Plan

Project No. 1316

Drawing No. A-1.0

This document contains confidential or proprietary information of Knothe & Bruce Architects. Neither the document nor the information herein is to be reproduced, distributed, used, or disclosed, either in whole or in part, except as specifically authorized by Knothe & Bruce Architects. Knothe & Bruce Architects is a United Visibility Company of Wisconsin.

KNOTHE & BRUCE ARCHITECTS
7601 University Avenue Suite 201
Middleton, Wisconsin 53562
608-836-3690 Fax 836-6934

Consultant

Notes

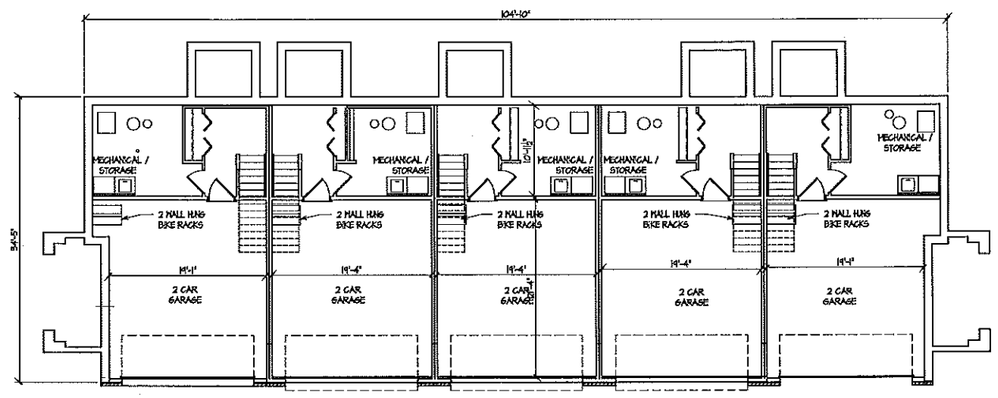

5 UNIT BASEMENT PLAN
1/8" = 1'-0"

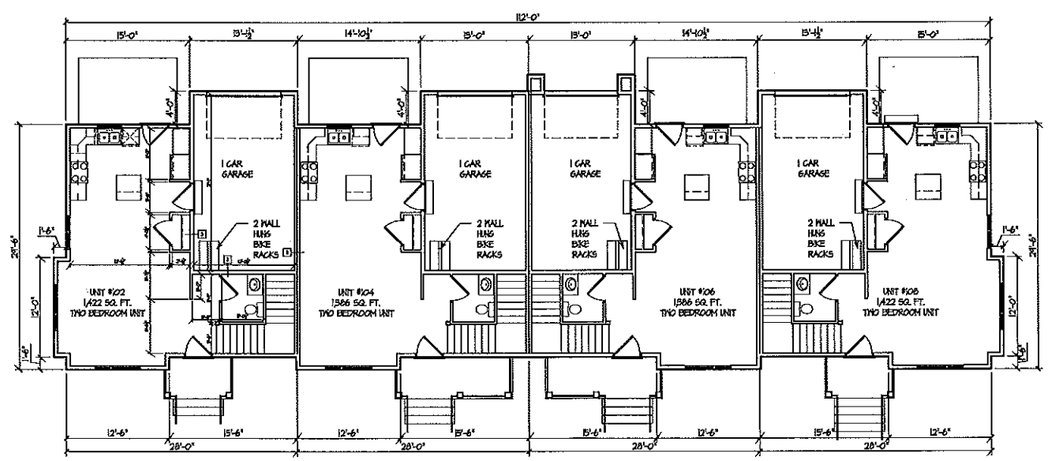

4 UNIT FIRST FLOOR PLAN
1/8" = 1'-0"

Revisions
June 26, 2013
Revised City - July 25, 2013

Project Title
RIVA - PHASE II
4 & 5 UNIT BASEMENT PLANS

Drawing Title
Basement Plans

Project No. 1316
Drawing No. A-1.1

This document contains confidential or proprietary information of Knothe & Bruce Architects. Neither this document nor the information herein is to be reproduced, distributed, used, or disclosed, either in whole or in part, except as specifically authorized by Knothe & Bruce Architects. Knothe & Bruce Architects is a Limited Liability Company of Wisconsin.

EXTERIOR MATERIAL SCHEDULE				
	BUILDING MATERIAL	MATERIAL	MANUFACTURER	COLOR
1	HORIZONTAL SIDING #1	COMPOSITE	SMART SIDE	TBD
2	HORIZONTAL SIDING #2	COMPOSITE	SMART SIDE	TBD
3	SIDING ACCENT STRIPE	COMPOSITE	SMART SIDE	TBD

KNOTHE & BRUCE ARCHITECTS
7601 University Avenue Suite 201
Middleton, Wisconsin 53562
608-836-3690 Fax 836-6934

Consultant

Notes

WEST ELEVATION
3/32" = 1'-0"

SOUTH ELEVATION
3/32" = 1'-0"

NORTHEAST ELEVATION
3/32" = 1'-0"

NORTH ELEVATION
3/32" = 1'-0"

Revisions
City-July 25, 2013
City-August 9, 2013

Project Title
Riva - Building #3

Drawing Title
Exterior Elevations

Project No.	Drawing No.
1316	A-2.1

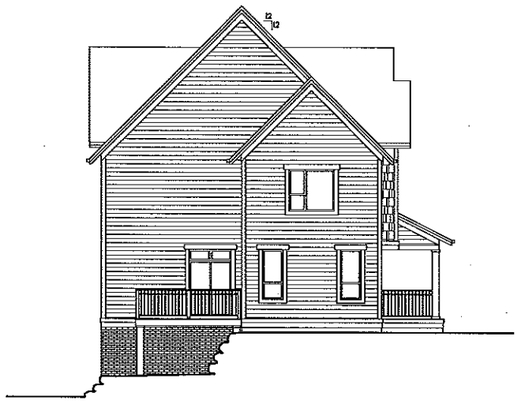

SIDE ELEVATION
1/8" = 1'-0"

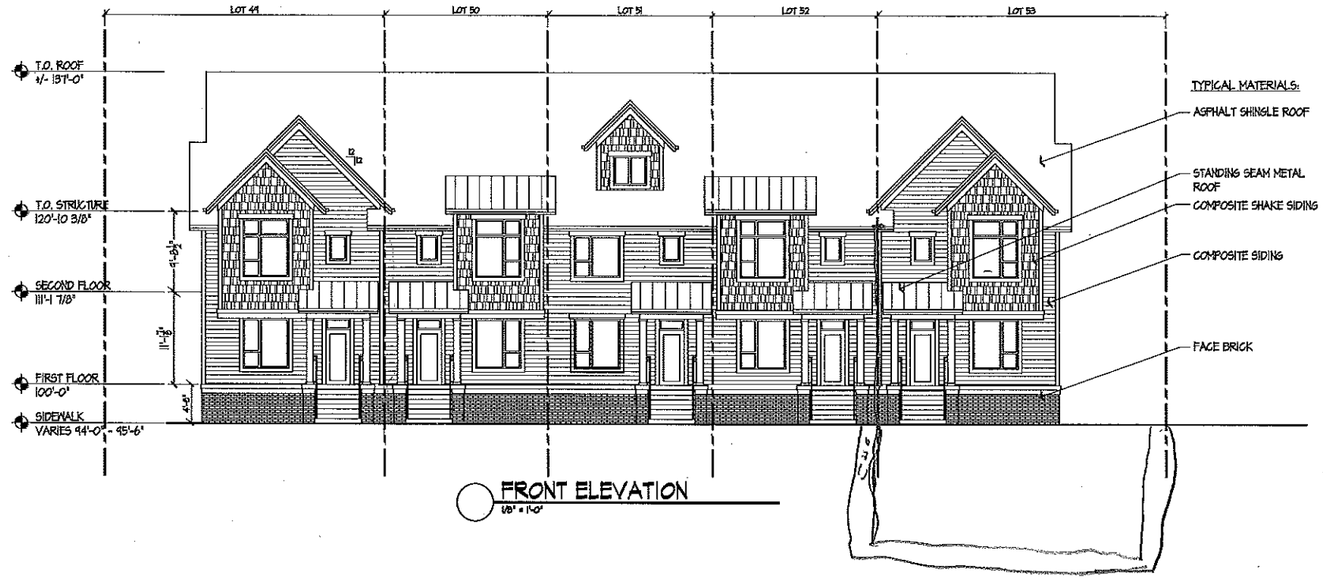

FRONT ELEVATION
1/8" = 1'-0"

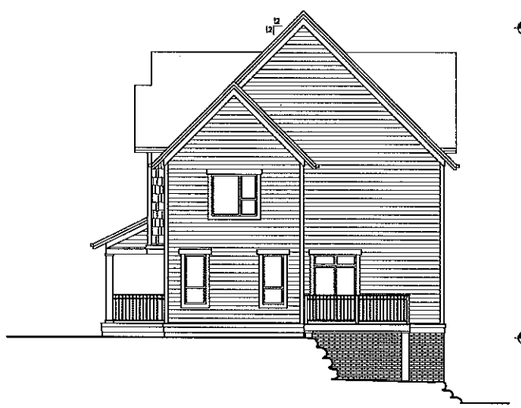

SIDE ELEVATION
1/8" = 1'-0"

REAR ELEVATION
1/8" = 1'-0"

KNOTHE & BRUCE ARCHITECTS
7601 University Avenue Suite 201
Middleton, Wisconsin 53562
608-836-3690 Fax 836-6934

Consultant

Notes

Revisions
City-July 25, 2013
City-August 9, 2013

Project Title
Riva - Phase II
5 Unit Townhomes

Drawing Title
Exterior Elevations

Project No. 1316

Drawing No. A-2.2

This document remains confidential or proprietary information of Knothe & Bruce Architects. Neither this document nor the information herein is to be reproduced, distributed, used, or disclosed, either in whole or in part, except as specifically authorized by Knothe & Bruce Architects. Knothe & Bruce Architects is a Limited Liability Company of Wisconsin.

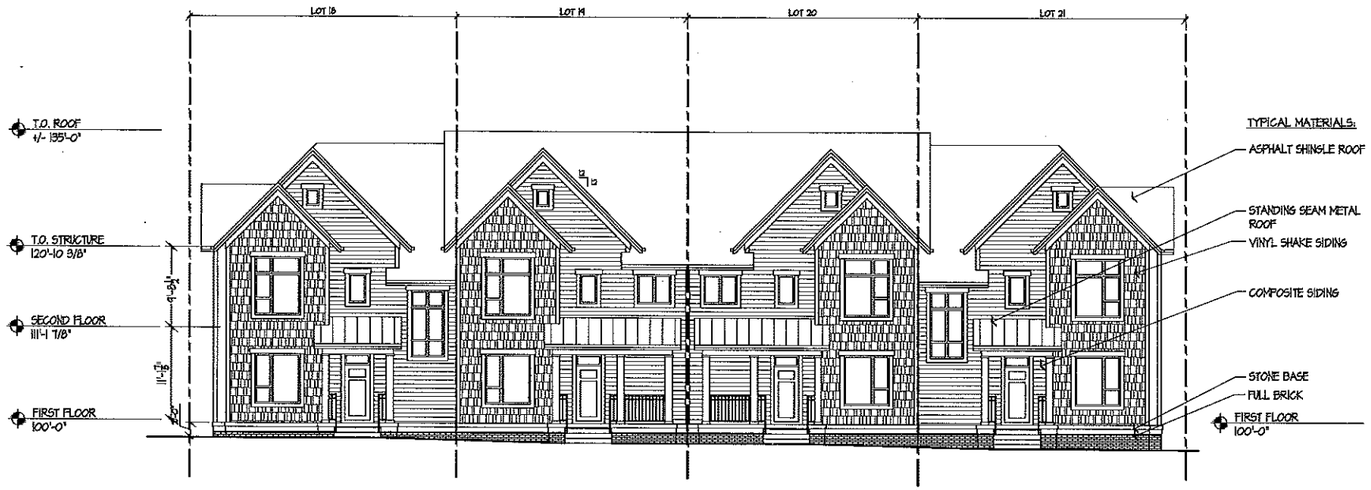

4-UNIT EAST ELEVATION
1/8" = 1'-0"

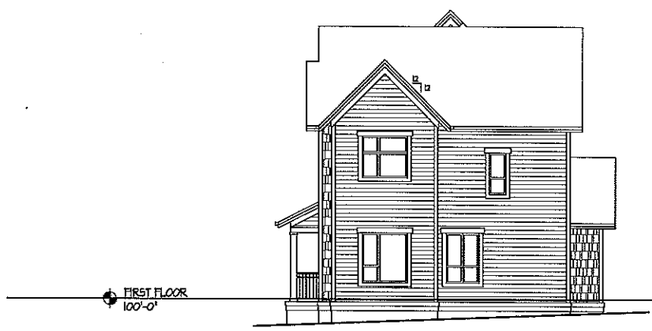

NORTH ELEVATION
1/8" = 1'-0"

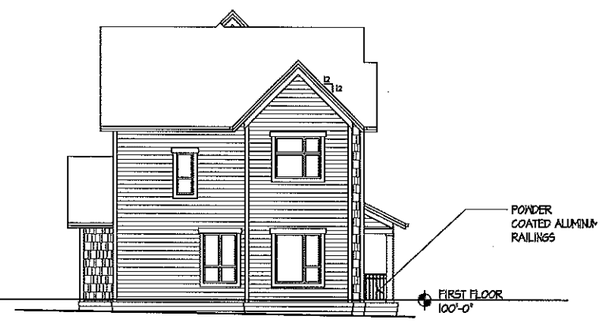

SOUTH ELEVATION
1/8" = 1'-0"

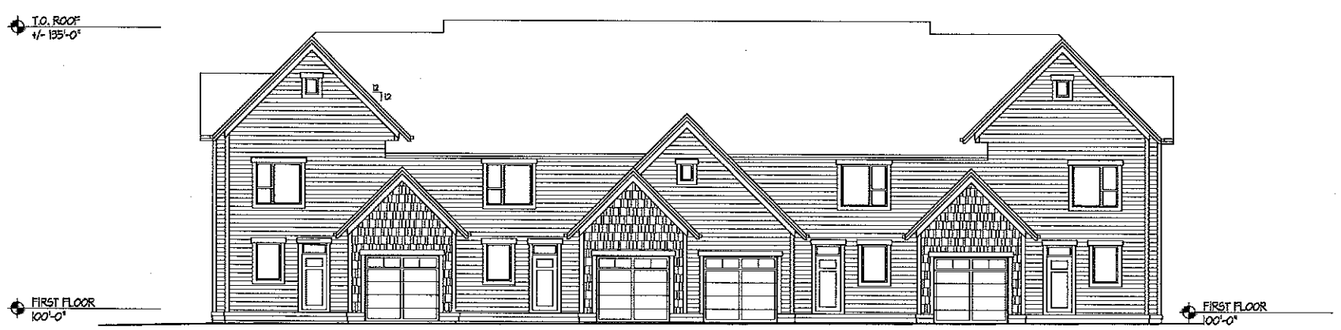

4-UNIT WEST ELEVATION
1/8" = 1'-0"

KNOTHE & BRUCE ARCHITECTS
7601 University Avenue Suite 201
Middleton, Wisconsin 53562
608-836-3690 Fax 836-6934

Consultant

Notes

Revisions
City-July 25, 2013
City-August 9, 2013

Project Title
Riva - Phase II
4 Unit Townhomes

Drawing Title
Exterior Elevations

Project No. 1316

Drawing No. A-2.3

This document contains confidential or proprietary information of Knothe & Bruce Architects. Neither this document nor the information herein is to be reproduced, distributed, used, or disclosed, either in whole or in part, except as specifically authorized by Knothe & Bruce Architects. Knothe & Bruce Architects is a Limited Liability Company of Wisconsin.

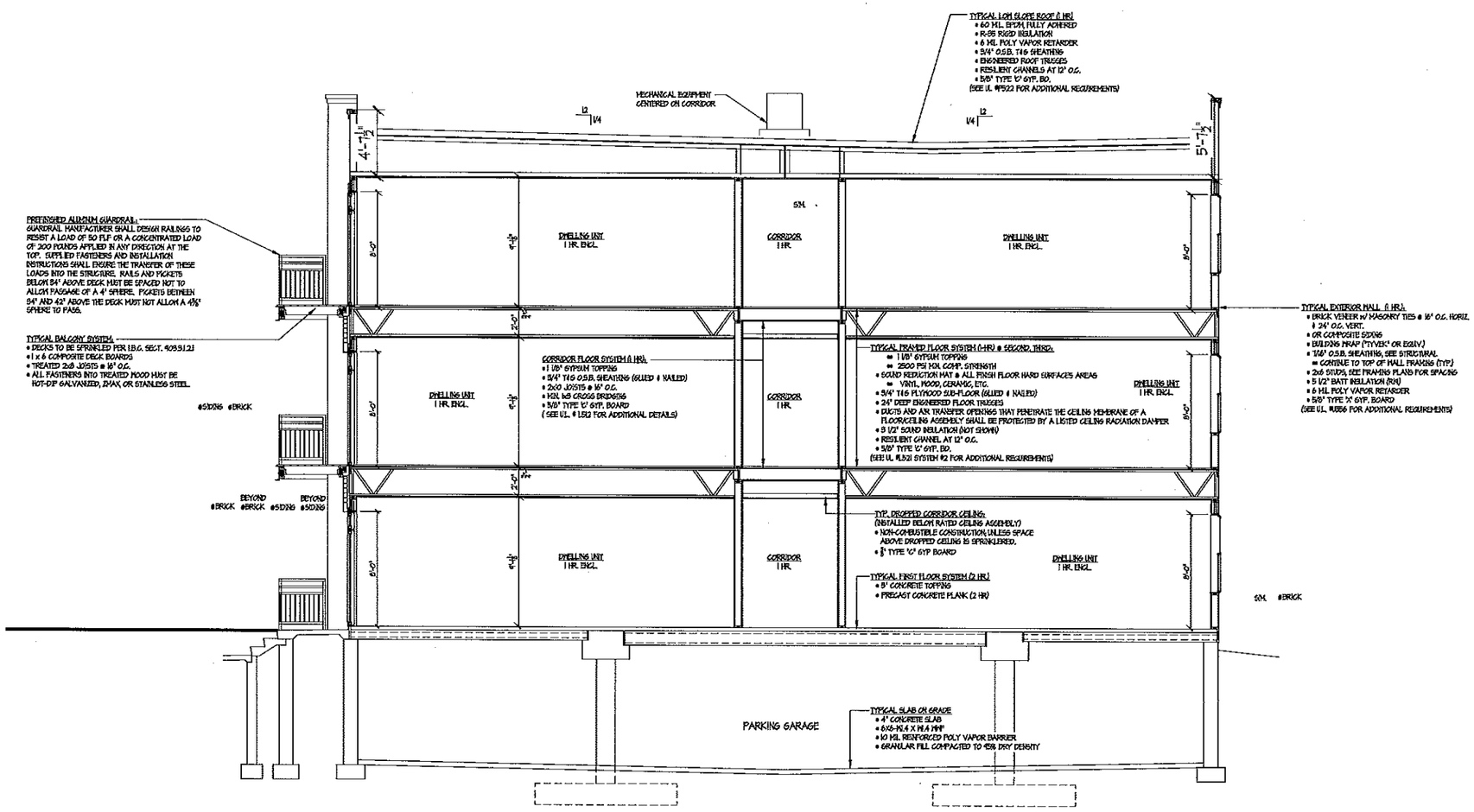

Building Section
1/4" = 1'-0"

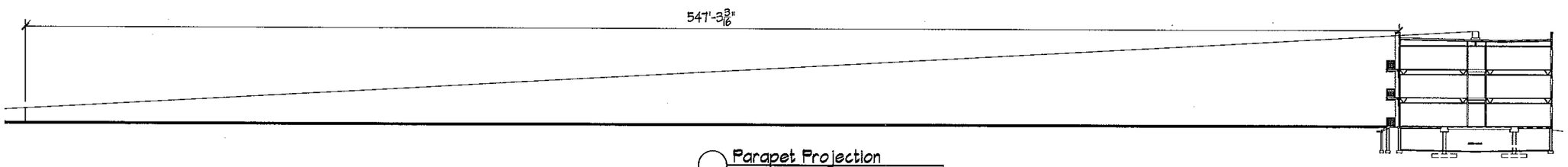

Parapet Projection
1" = 20'-0"

KNOTHE & BRUCE ARCHITECTS
7601 University Avenue Suite 201
Middleton, Wisconsin 53562
608-836-3690 Fax 836-6934

Consultant

Notes

Revisions
City-July 25, 2013

Project Title
Riva - Phase II
4 Unit Townhomes

Drawing Title
Building Section

Project No. 1316

Drawing No. A-3.1

This document contains confidential or proprietary information of Knothe & Bruce Architects. Neither this document nor the information herein is to be reproduced, distributed, used, or disclosed, either in whole or in part, except as specifically authorized by Knothe & Bruce Architects. Knothe & Bruce Architects is a Limited Liability Company of Wisconsin.